COVID-19 RESOURCE GUIDE

Chesterfield County

MENTAL HEALTH SUPPORT SERVICES

Substance Use Disorder Team

Table of Contents:

Current Order from the Governor, VDH Hotline, Chesterfield Hotline……3

COVID-19 information……..3-5

CDC Guidance……6-8

Face Masks……..9-12

Mental health……13

Food……..14-17

Power, Gas, Water, and Communication……..18

Transportation……19

Medical……..20-21

Recovery Supports (meetings and AliveRVA)……22

Medication Assisted Treatment (MAT)……..23-24

Community Treatment……..25-26

Domestic Violence……27

Zoom instruction……28

Current Order from the Governor:

March 30, 2020—Governor Ralph Northam issued a statewide Stay at Home order to protect the health and safety of Virginians and mitigate the spread of the novel coronavirus, or COVID19. The executive order takes effect immediately and will remain in place until June 10, 2020, unless amended or rescinded by a further executive order.

The order directs all Virginians to stay home except in extremely limited circumstances. Individuals may leave their residence for allowable travel, including to seek medical attention, work, care for family or household members, obtain goods and services like groceries, prescriptions, and others as outlined in Executive Order Fifty-Three, and engage in outdoor activity with strict social distancing requirements.

Accurate, reliable information about COVID-19 can be found on the Virginia Department of Health (VDH) website.

The Virginia Department of Health operates a 24-hour Coronavirus Information Hotline. For questions about the coronavirus, call (877) ASK-VDH3 or (877) 2758343.

Chesterfield Call Center - Emergency Operations Center

The Chesterfield County Emergency Operations Center is providing a call center for Chesterfield residents and employees who have general questions about county operations and services during the COVID-19 response. The call center will be open Monday-Friday from 8:30 a.m. to 5 p.m. The call center phone number is **804-7512EOC (804-751-2362)**

Chesterfield COVID YouTube Playlist

Wash Your Hands!

Prevent Germs From Spreading

1. Wet your hands
2. Soap up
3. Wash for 20 seconds
4. Rinse hands
5. Dry hands
6. Turn water off with a towel

VDH VIRGINIA DEPARTMENT OF HEALTH

ATTENTION
COVID-19

IF YOU HAVE RECENTLY...

If you have recently been around large crowds, or had close contact with someone who recently traveled to an affected area and was **SICK**

AND YOU HAVE

A FEVER, COUGH, OR TROUBLE BREATHING, CALL YOUR HEALTHCARE PROVIDER IMMEDIATELY!

Cover your coughs and sneezes
Use a tissue or your sleeve, not your hands.

Wash your hands
Wash hands often with soap and water.

Avoid touching your face
Do not touch your eyes, nose or mouth with unwashed hands.

Always dispose of used tissues in a waste can
Do not leave used tissues lying around.

Visit **vdh.virginia.gov/coronavirus** for the latest information.

VDH VIRGINIA DEPARTMENT OF HEALTH

How to Protect Yourself & Others

Older adults and people who have severe underlying medical conditions like heart or lung disease or diabetes seem to be at higher risk for developing serious complications from COVID-19 illness. More information on Are you at higher risk for serious illness?

Know How it Spreads

- There is currently no vaccine to prevent coronavirus disease 2019 (COVID-19).
- **The best way to prevent illness is to avoid being exposed to this virus.**
- The virus is thought to spread mainly from person-to-person.
    - Between people who are in close contact with one another (within about 6 feet). ○ Through respiratory droplets produced when an infected person coughs, sneezes or talks.
    - These droplets can land in the mouths or noses of people who are nearby or possibly be inhaled into the lungs.
    - Some recent studies have suggested that COVID-19 may be spread by people who are not showing symptoms.

More details: How COVID-19 Spreads

Everyone Should

Clean your hands often

- Wash your hands often with soap and water for at least 20 seconds especially after you have been in a public place, or after blowing your nose, coughing, or sneezing.
- If soap and water are not readily available, **use a hand sanitizer that contains at least 60% alcohol**. Cover all surfaces of your hands and rub them together until they feel dry.
- **Avoid touching your eyes, nose, and mouth** with unwashed hands.

Avoid close contact

- **Avoid close contact** with people who are sick
- **Stay home as much as possible**.
- Put **distance between yourself and other people**.
    - Remember that some people without symptoms may be able to spread virus.
    - Keeping distance from others is especially important for people who are at higher risk of getting very sick.

Cover your mouth and nose with a cloth face cover when around others

- You could spread COVID-19 to others even if you do not feel sick.
- Everyone should wear a cloth face cover when they have to go out in public, for example to the grocery store or to pick up other necessities.
    - Cloth face coverings should not be placed on young children under age 2, anyone who has trouble breathing, or is unconscious, incapacitated or otherwise unable to remove the mask without assistance.
- The cloth face cover is meant to protect other people in case you are infected.
- Do NOT use a facemask meant for a healthcare worker.
- Continue to keep about 6 feet between yourself and others. The cloth face cover is not a substitute for social distancing.

Cover coughs and sneezes

- **If you are in a private setting and do not have on your cloth face covering, remember to always cover your mouth and nose** with a tissue when you cough or sneeze or use the inside of your elbow.
- **Throw used tissues** in the trash.
- Immediately **wash your hands** with soap and water for at least 20 seconds. If soap and water are not readily available, clean your hands with a hand sanitizer that contains at least 60% alcohol.

Clean and disinfect

- **Clean AND disinfect frequently touched surfaces daily**. This includes tables, doorknobs, light switches, countertops, handles, desks, phones, keyboards, toilets, faucets, and sinks.
- **If surfaces are dirty, clean them:** Use detergent or soap and water prior to disinfection.

To disinfect:
Most common EPA-registered household disinfectants will work. Use disinfectants appropriate for the surface.

Options include:

- **Diluting your household bleach.**
  To make a bleach solution, mix:
  - 5 tablespoons (1/3rd cup) bleach per gallon of water
    OR
  - 4 teaspoons bleach per quart of water

  Follow manufacturer's instructions for application and proper ventilation. Check to ensure the product is not past its expiration date. Never mix household bleach with ammonia or any other cleanser. Unexpired household bleach will be effective against coronaviruses when properly diluted.

- **Alcohol solutions.**
  Ensure solution has at least 70% alcohol.
- **Other common EPA-registered household disinfectants.**
  Products with EPA-approved emerging viral pathogens claims are expected to be effective against COVID-19 based on data for harder to kill viruses. Follow the manufacturer's instructions for all cleaning and disinfection products (e.g., concentration, application method and contact time, etc.).

Use of Cloth Face Coverings to Help Slow the Spread of COVID-19

Español
Printer friendly version

How to Wear a Cloth Face Covering

Cloth face coverings should—

- fit snugly but comfortably against the side of the face
- be secured with ties or ear loops
- include multiple layers of fabric
- allow for breathing without restriction
- be able to be laundered and machine dried without damage or change to shape

CDC on Homemade Cloth Face Coverings

CDC recommends wearing cloth face coverings in public settings where other social distancing measures are difficult to maintain (e.g., grocery stores and pharmacies), **especially** in areas of significant community-based transmission.

CDC also advises the use of simple cloth face coverings to slow the spread of the virus and help people who may have the virus and do not know it from transmitting it to others. Cloth face coverings fashioned from household items or made at home from common materials at low cost can be used as an additional, voluntary public health measure.

Cloth face coverings should not be placed on young children under age 2, anyone who has trouble breathing, or is unconscious, incapacitated or otherwise unable to remove the mask without assistance.

The cloth face coverings recommended are not surgical masks or N-95 respirators. Those are critical supplies that must continue to be reserved for healthcare workers and other medical first responders, as recommended by current CDC guidance.

Should cloth face coverings be washed or otherwise cleaned regularly? How regularly?

Yes. They should be routinely washed depending on the frequency of use.

How does one safely sterilize/clean a cloth face covering?

A washing machine should suffice in properly washing a face covering.

How does one safely remove a used cloth face covering?

Individuals should be careful not to touch their eyes, nose, and mouth when removing their face covering and wash hands immediately after removing.

Sew and No Sew Instructions

Sewn Cloth Face Covering

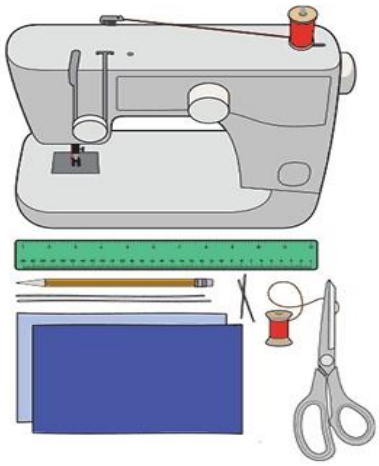

Materials

- Two 10”x6” rectangles of cotton fabric
- Two 6” pieces of elastic (or rubber bands, string, cloth strips, or hair ties)
- Needle and thread (or bobby pin)
- Scissors
- Sewing machine

Tutorial

1. Cut out two 10-by-6-inch rectangles of cotton fabric. Use tightly woven cotton, such as quilting fabric or cotton sheets. T-shirt fabric will work in a pinch. Stack the two rectangles; you will sew the mask as if it was a single piece of fabric.

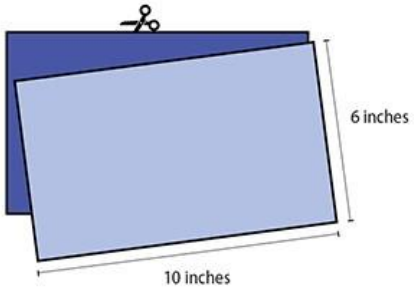

2. Fold over the long sides ¼ inch and hem. Then fold the double layer of fabric over ½ inch along the short sides and stitch down.

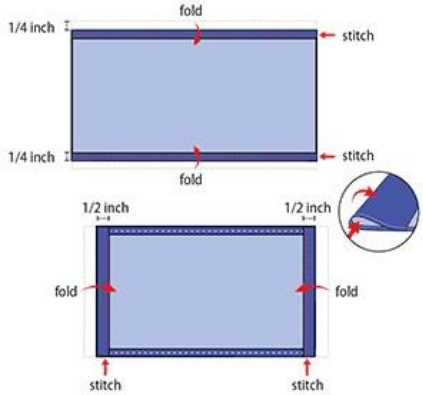

3. Run a 6-inch length of 1/8-inch wide elastic through the wider hem on each side of the mask. These will be the ear loops. Use a large needle or a bobby pin to thread it through. Tie the ends tight. Don’t have elastic? Use hair ties or elastic head bands. If you only have string, you can make the ties longer and tie the mask behind your head.

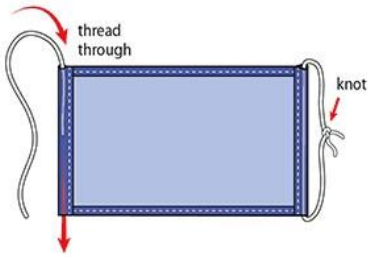

4. Gently pull on the elastic so that the knots are tucked inside the hem. Gather the sides of the mask on the elastic and adjust so the mask fits your face. Then securely stitch the elastic in place to keep it from slipping.

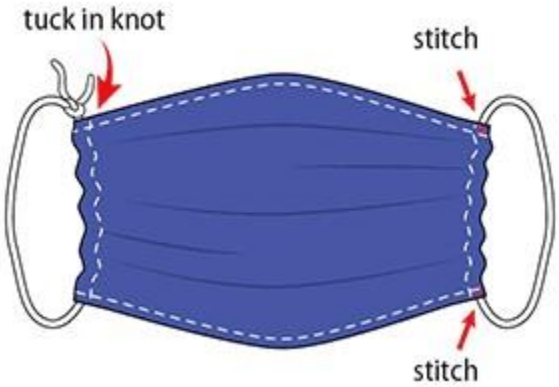

Quick Cut T-shirt Face Covering (no sew method)

Materials

- T-shirt
- Scissors

Tutorial

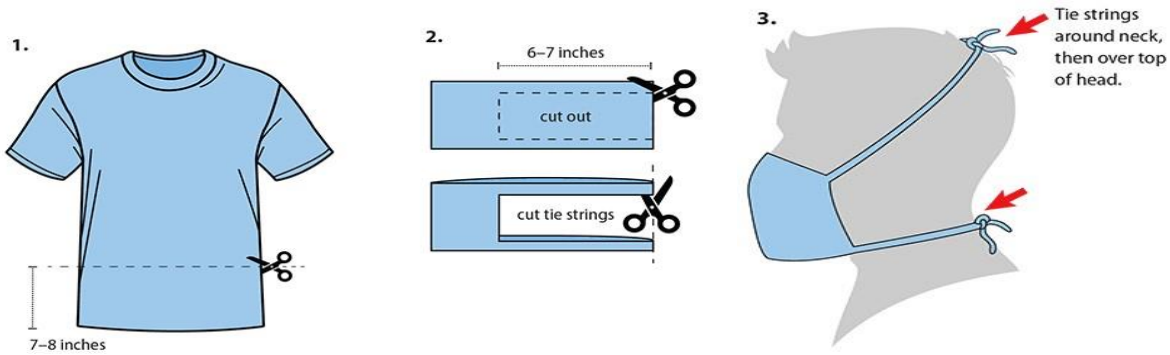

Bandana Face Covering (no sew method)

Materials

- Bandana (or square cotton cloth approximately 20”x20”)
- Coffee filter
- Rubber bands (or hair ties)
- Scissors (if you are cutting your own cloth)

1.

2.

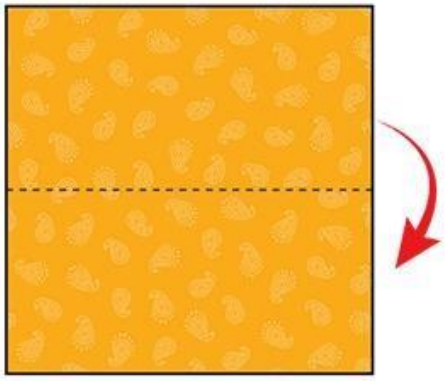

3.

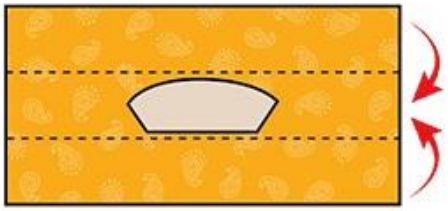

Fold filter in center of folded bandanna.

Fold top down. Fold bottom up.

4.

Place rubber bands or hair ties about 6 inches apart.

5.

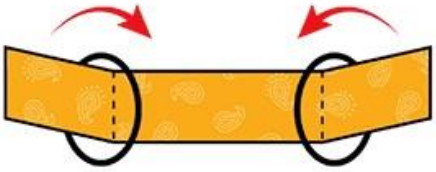

Fold side to the middle and tuck.

6.

7.

Mental Health Crisis Services:

As the spread of the coronavirus, or COVID-19, forces residents to adopt several social distancing measures, the Chesterfield County Department of Mental Health Support Services (MHSS) remains operational for residents seeking its assistance.

Although our building will be inaccessible to the public except by emergency appointment, regular client appointments and intakes for new clients are being conducted by telephone or through tele-health options.

Individuals wishing to begin outpatient counseling services through MHSS can call our Intake number at 768-7318.

Individuals experiencing a psychiatric emergency should call the **Crisis Line at 804-748-6356**, where crisis services are available 24 hours a day, seven days a week.

Trevor Project Hotline: 1-866-488-7386

The Trevor Project is the leading national organization providing crisis intervention and suicide prevention services to lesbian, gay, bisexual, transgender, queer & questioning (LGBTQ) young people under 25.

NAMI: Text "NAMI" to 741741 if you are having suicidal thoughts or urges. The call line is current closed. You can reach out by text.

NAMI COVID-19 Resource Guide: A guide to help individual and families navigate COVID

Suicide Prevention Lifeline: (800) 273-TALK or (800) SUICIDE

Mental Health America of Virginia: 866-400-MHAV (6428) – peer run M-F (non-crisis)

The Dougy Center: grief and loss resources for children and families

FOOD:

Up-to-date information about food resources in your community.

Hunger Hotline: 804-521-2500 ext. 631
Tip: Many food pantries and soup kitchens have ceased or changed operations. Call before you go to confirm that the service is still running.

Chesterfield food bank https://chesterfieldfoodbank.org

Instructions for drive through pick-up and link to locations, times for distributions on this site, updated as they change

Chesterfield School Food Distribution Information:

Chesterfield County Public Schools will provide free meals to students while the school division is closed during the next two weeks due to COVID-19.
Meals are for children ages 18 and younger, and will be available for pickup at a Food Services kiosk located outside of the school. The attached chart provides school and community locations at which food is available and the hours of service.

This program provides lunch for that particular day (Monday-Friday) and breakfast for the next morning. Meals will be provided on a first-come, first-served basis.
In accordance with federal civil rights law and the U.S. Department of Agriculture's civil rights regulations and policies, institutions participating in USDA programs are prohibited from discriminating based on race, color, national origin, sex, religious creed, disability, age, political beliefs or reprisal or retaliation for prior civil rights activity in any program or activity conducted or funded by the USDA.

Updated Food Distribution 3-16-2020 (PDF)

CHESTERFIELD FOOD BANK OPPORTUNITIES

The Chesterfield Food Bank will be serving breakfast/lunch items to children. Items will be available for pickup on Tuesdays and Thursdays from 4-6:30 p.m. at the Chester location at 12211 Iron Bridge. Distribution begins on March 17.

This will be a drive-through distribution, eliminating the need for clients to leave their vehicles. The food will be distributed in the parking lot directly to each vehicle.
Friday distributions at the Chester location will continue beginning at 4 p.m.

Saturday distributions will continue at the normal school locations. Food will be distributed in the parking lot, allowing families to drive through for pickup.

- First Saturday of the month: Hopkins Elementary
- Second Saturday of the month: Davis Elementary
- Third Saturday of the month: Ettrick Elementary
- Fourth Saturday of the month: Chalkley Elementary

The Chesterfield Food Bank is looking for volunteers, as well. To learn more visit https://www.chesterfieldfoodbank.org/.

Tim Bullis
Executive Director, Communications and Community Engagement
Chesterfield County Public Schools

Pearl Taylor
Director
Food and Nutrition Services

804.743.3717
Fax 804.275.6930

To meet the needs of students during COVID-19 school closures, Chesterfield County Public Schools continues provide meals for students for pick-up without charge and regardless of race, color, national origin, sex, age or disability and without discrimination. Meals will be provided on a first-come, first-served basis at the sites and times listed below.

Please note these important updates to the distribution of meals:

- Children do not have to be present to pick up meals. To pick up meals without a student present, please tell the staff member your student's first and last names and age.
- On Monday and Wednesday, two lunches and two breakfasts will be provided for each child.
- On Fridays, three lunches and three breakfasts will be provided for each child.
- No meal service is available on Tuesdays or Thursdays.

Bellwood ES: March 30-April 30, 2020, **M, W, F** Breakfast and lunch meals pick-up between **11:00-12:00** p.m.	**Bensley ES**: March 30-April 30, 2020, **M, W, F** Breakfast and lunch meals pick-up between **11:00-12:00** p.m.	**Beulah ES**: March 30-April 30, 2020, **M, W, F** Breakfast and lunch meals pick-up between **11:00-12:00** p.m.
Curtis ES: March 30-April 30, 2020, **M, W, F** Breakfast and lunch meals pick-up between **11:00-12:00** p.m.	**AM Davis E**S: March 30-April 30, 2020, **M, W, F** Breakfast and lunch meals pick-up between **11:00-12:00** p.m.	**Crestwood ES**: March 30-April 30, 2020, **M, W, F** Breakfast and lunch meals pick-up between **11:00-12:00** p.m.
Ettrick ES March 30-April 30, 2020, **M, W, F** Breakfast and lunch meals pick-up between **11:00-12:00** p.m.	**Falling Creek ES**:March 30-April 30, 2020, **M, W, F** Breakfast and lunch meals pick-up between **11:00-12:00** p.m. .	**Ecoff ES**:March 30-April 30, 2020, **M, W, F** Breakfast and lunch meals pick-up between **11:00-12:00** p.m.
Hopkins ES: March 30-April 30, 2020, **M, W, F** Breakfast and lunch meals pick-up between **11:00-12:00** p.m.	**JA Chalkley ES:**March 30-April 30, 2020, **M, W, F** Breakfast and lunch meals pick-up between **11:00-12:00** p.m. .	**Harrowgate ES**: March 30-April 30, 2020, **M, W, F** Breakfast and lunch meals pick-up between **11:00-12:00** p.m.
M. Christian ES: March 30-April 30, 2020, **M, W, F** Breakfast and lunch meals pick-up between **11:00-12:00** p.m. .	**Matoaca ES**:March 30-April 30, 2020, **M, W, F** Breakfast and lunch meals pick-up between **11:00-12:00** p.m. .	**Hening ES:** March 30-April 30, 2020, **M, W, F** Breakfast and lunch meals pick-up between **11:00-12:00** p.m.
Reams ES: March 30-April 30, 2020, **M, W, F** Breakfast and lunch meals pick-up between **11:00-12:00** p.m.	**Salem ES**: March 30-April 30, 2020, **M, W, F** Breakfast and lunch meals pick-up between **11:00-12:00** p.m.	**Providence ES**: March 30-April 30, 2020, **M, W, F** Breakfast and lunch meals pick-up between **11:00-12:00** p.m.
Crenshaw ES: March 30-April 30, 2020, **M, W, F** Breakfast and lunch meals pick-up between **11:00-12:00** p.m. .	**Manchester MS**: March 30-April 30, 2020, **M, W, F** Breakfast and lunch meals pick-up between **11:00-12:00** p.m. .	**Meadowbrook HS**: March 30-April 30, 2020, **M, W, F** Breakfast and lunch meals pick-up between **11:00-12:00** p.m.
Wells ES: March 30-April 30, 2020, **M, W, F** Breakfast and lunch meals pick-up between **11:00-12:00** p.m.	**Jacobs ES**:March 30-April 30, 2020, **M, W, F** Breakfast and lunch meals pick-up between **11:00-12:00** p.m.	**Davis MS**: March 30-April 30, 2020, **M, W, F** Breakfast and lunch meals pick-up between **11:00-12:00** p.m. .
Bon Air ES: March 30-April 30, 2020, **M, W, F** Breakfast and lunch meals pick-up between **11:00-12:00** p.m. .	**Matoaca MS**: March 30-April 30, 2020, **M, W, F** Breakfast and lunch meals pick-up between **11:00-12:00** p.m.	**Enon ES**:March 30-April 30, 2020, **M, W, F** Breakfast and lunch meals pick-up between **11:00-12:00** p.m.

Gates ES: March 30-April 30, 2020, **M, W, F** Breakfast and lunch meals pick-up between **11:00-12:00** p.m.	**Monacan HS**: March 30-April 30, 2020, **M, W, F** Breakfast and lunch meals pick-up between **11:00-12:00** p.m.	**Matoaca HS**: March 30-April 30, 2020, **M, W, F** Breakfast and lunch meals pick-up between **11:00-12:00** p.m.

James River HS: March 30-April 30, 2020, **M, W, F** Breakfast and lunch meals pick-up between **11:00-12:00** p.m.	**Falling Creek Apartments**: March 30-April 30, 2020, **M, W, F** Breakfast and lunch meals pick-up between **11:00-12:00** p.m.	**Manchester HS:** March 30-April 30, 2020, **M, W, F** Breakfast and lunch meals pick-up between **11:00-12:00** p.m.
Winchester Green Apartments: March 30-April 30, 2020, **M, W, F** Breakfast and lunch meals pick-up between **11:00-11:30** a.m.	**South Pointe Apartments**:March 30-April 30, 2020, **M, W, F** Breakfast and lunch meals pick-up between **11:40-12:10** p.m.	**Holiday Mobile Park**:March 30-April 30, 2020, **M, W, F** Breakfast and lunch meals pick-up between **11:00-12:00** p.m.
Meadowbrook Apartments: March 30-April 30, 2020, **M, W, F** Breakfast and lunch meals pick-up between **11:40-12:10** a.m.	**Cross Creek Apartments**: March 30-April 30, 2020, **M, W, F** Breakfast and lunch meals pick-up between **11:40-12:10** a.m.	**Maisonette Apartments**: March 30-April 30, 2020, **M, W, F** Breakfast and lunch meals pick-up between **11:40-12:10** p.m.
Chesterfield Village Apartments:March 30-April 30, 2020, **M, W, F** Breakfast and lunch meals pick-up between **11:40-12:10** a.m.	**River Road Terrace Apartments**:March 30-April 30, 2020, **M, W, F** Breakfast and lunch meals pick-up between **11:00-11:45** a.m.	**Pocoshock Ridge Apartments**: March 30-April 30, 2020, **M, W, F** Breakfast and lunch meals pick-up between **11:00-11:30** a.m.
Mallard Cove Apartment : March 30-April 30, 2020, **M, W, F** Breakfast and lunch meals pick-up between **11:00-11:30** a.m.	**Arnett's Family Store:** March 30-April 30, 2020, **M, W, F** Breakfast and lunch meals pick-up between **11:00-11:45** a.m.	**North Arch Village Apartments**:March 30-April 30, 2020, **M, W, F** Breakfast and lunch meals pick-up between **11:00-11:30** a.m.
Greenleigh Mobile Home Community:: March 30-April 30, 2020, **M, W, F** Breakfast and lunch meals pick-up between **11:00-12:00** p.m..	**Genito Glen Apartments**:March 30-April 30, 2020, **M, W, F** Breakfast and lunch meals pick-up between **11:35-12:00** p.m..	**Ivy Walk Apartments**:March 30-April 30, 2020, **M, W, F** Breakfast and lunch meals pick-up between **11:00-11:45** a.m.
Harbour East Mobile Home Community: March 30-April 30, 2020, **M, W, F** Breakfast and lunch meals pick-up between **11:40-12:00** p.m..	**Heritage Point Apartments:**: March 30-April 30, 2020, **M, W, F** Breakfast and lunch meals pick-up between **11:00-12:00** p.m..	**Rockwood Park Apartments:**March 30-April 30, 2020, **M, W, F** Breakfast and lunch meals pick-up between **11:00-11:45** a.m.

In accordance with Federal civil rights law and U.S. Department of Agriculture (USDA) civil rights regulations and policies, the USDA, its Agencies, offices, and employees, and institutions participating in or administering USDA programs are prohibited from discriminating based on race, color, national origin, sex, religious creed, disability, age, political beliefs, or reprisal or retaliation for prior civil rights activity in any program or activity conducted or funded by USDA.

Persons with disabilities who require alternative means of communication for program information (e.g. Braille, large print, audiotape, American Sign Language, etc.), should contact the Agency (State or local) where they applied for benefits. Individuals who are deaf, hard of hearing or have speech disabilities may contact USDA through the Federal Relay Service at (800) 877-8339. Additionally, program information may be made available in languages other than English.

To file a program complaint of discrimination, complete the USDA Program Discrimination Complaint Form, (AD-3027) found online at: How to File a Complaint, and at any USDA office, or write a letter addressed to USDA and provide in the letter all of the information requested in the form. To request a copy of the complaint form, call (866) 632-9992. Submit your completed form or letter to USDA by:

(1) mail: U.S. Department of Agriculture Office of the Assistant Secretary for Civil Rights 1400 Independence Avenue, SW Washington, D.C. 20250-9410
(2) fax: (202) 690-7442; or
(3) email: program.intake@usda.gov.

This institution is an equal opportunity provider.

Salvation Army

In Virginia, The Salvation Army is providing box meals, and our food pantries are providing a drive-thru service to limit contact.

We are also providing social services online and through phone interviews when possible to limit exposure to our staff and clients.

Chesterfield-Colonial Heights Alliance for Social Ministry (CCHASM): CCHASM will connect Chesterfield and Colonial Heights residents in crisis with food.

Please call (804) 796-2749 Monday-Thursday, 8:30 a.m. to 1:30 p.m.

For updates directly from CCHASM, please visit https://www.cchasm.org/ or https://www.facebook.com/CCHASM/.

A Place of Miracles Café: A Place of Miracles will distribute food to anyone in need on Fridays between 4:30 p.m. and 6:30 p.m. at 8820 Metro Court, North Chesterfield 23237.

For updates directly from A Place of Miracles Café, please visit https://www.facebook.com/Aplaceofmiraclescafe/.

Mission Community Church (formerly Bermuda Baptist Church): Mission Community Church will distribute food through a drive-through model. Citizens do not need to call ahead. Distributions occur 2nd and 4th Mondays at 5:30 p.m. at the church located at 13912 Jeff Davis Hwy, Chester, VA 23831.

Power, Gas, Water and Communication

Dominion Power and Columbia Gas will not be disconnecting anyone's service for the next two months.

Dominion power will restore your electricity if it is turned off at 866-366-4357 8 a.m. to 5 p.m., Monday - Friday.

Chesterfield Water will not be disconnecting anyone's service at this time. Time frame was not specified for Water. Call if you need your water restored: (804) 748-1291

AT&T is waiving fees for going over existing data caps for the next 60 days (so far)
T-Mobile unlimited data on all plans (no matter what you signed up for)
Verizon-waiving late fees – no current extension of data as many of their plans are unlimited
Sprint: Starting Thursday, March 19, the carrier will also offer free unlimited data for 60 days to all customers currently on any data plan, plus an additional 20GB of mobile hotspot data.
SAFELINK: Unlimited talk and text and an extra 5GB (making it total of 8GB data) for April only and unlimited minutes for the month of May. You don't need to do anything. This benefit will be automatically applied to your account.

Life Line customers are also receiving data increases but they seem to vary by provider – folks should be encouraged to check first.

Most internet and cell providers a have made their "hotspots" open to the public.

Free or Low cost internet: https://corporate.comcast.com/covid-19

http://wifi.xfinity.com/

Additionally:

The FCC is encouraging all providers to sign a pledge to do the following things:

The Keep Americans Connected Pledge reads as follows:

Given the coronavirus pandemic and its impact on American society, [[Company Name]] pledges for the next 60 days to:

1. not terminate service to any residential or small business customers because of their inability to pay their bills due to the disruptions caused by the coronavirus pandemic;
2. waive any late fees that any residential or small business customers incur because of their economic circumstances related to the coronavirus pandemic; and
3. open its Wi-Fi hotspots to any American who needs them.

Learn more about additional FCC efforts to address COVID-19 at fcc.gov/coronavirus.

Most major companies have already signed and many local internet providers as well.

https://www.fcc.gov/keep-americans-connected

Transportation:

Dependacare is still running.

Access Chesterfield

Chesterfield County Offices are currently closed to the public, this includes all locations that sell vouchers. All voucher sales will be handled through the mail by using our voucher order form. Mobility Services staff will process all sales daily and mail them out immediately. **With the COVID-19 or Coronavirus warning, we recommend using Access On Demand service, when possible, to ensure you more social distancing.**

GRTC is not charging fares. No unaccompanied minors allowed. Facemasks are requested.

UZURV CARE is experiencing high call volumes and delays. Temporarily UZURV is only accepting trips for 7-days in advance, not the normal 30-days.

UBER and Lyft have suspended shared rides.
UBER Eats has also waived their delivery fee.

Due to COVID-19, all Virginia DMV **all 75 DMV customer service centers are closed and all DMV 2 Go and DMV Connect services postponed** at the direction of Secretary Valentine in response to the continued spread of novel coronavirus, or COVID-19. DMV weigh stations have also suspended operations for the same duration.

DMV is encouraging its employees and customers to follow the recommendations of the Centers for Disease Control and Prevention and the Virginia Department of Health in regards to personal health and social distancing.

Drivers and Vehicles

Driver's licenses and identification cards set to expire between March 15 and May 15 are extended 60 days from the original date of expiration. This includes credentials for individuals aged 75 and older who are typically required to make an in-person visit to renew.

Vehicle registrations that expire in March and April are extended for 60 days.

Virginians eligible to renew their licenses, identification cards, or vehicle registration online are encouraged to take advantage of those services. Mail-in options are also available for a number of transactions, such as vehicle registration, original title transactions, and driver's license renewal, if mailed a notice.

If in-person service is needed, these customers will have an additional 60 days to renew credentials without a late fee.

Titling and Registration by Mail

Replacement titles and registration cards can be obtained online and original title and registration transactions can be conducted by mail. Customers who mail in their paperwork should keep photocopies and ship the package with a tracking number. A telephone number or email address should also be provided so DMV can contact them if additional information is needed.

For more about obtaining an original vehicle title or registration by mail, including expedited shipping options, see our Titling and Registration by Mail Process

Medical:

General information: **Call your provider before going in**. Most elective procedures and routine visits are being cancelled. Many providers are utilizing tele-health for routine matters.

Medicaid:

Medicaid copay requirements are temporarily waived.

Along with suspending copays, Medicaid will extend prescription refills to 90 days, enhance telehealth options and waive some pre-approval requirements, Medicaid also will cover testing for COVID-19.

VCU:

The emergency department is screening and separating symptomatic people from asymptomatic people who are coming in for assistance.

VCU Visitation rules are changing – click the link for the latest information

Henrico Doctor's:

Points of entry are limited and all people are being screened for symptoms.

Patient visitation is limited w/ restrictions in place.

BON SECOURS information:

Bon Secours Visiting information: No visitors except end of life, pediatric (w/ limitations), and other approved exemptions

If individuals are experiencing flu-like symptoms, which may include fever, cough, shortness of breath, sore throat or body aches, they should not go to their primary care provider. Instead, they should visit our local flu clinic(s), located at:

Petersburg Evaluation Center

50 B Medical Park Blvd
Petersburg, VA 23805
804-765-6447

Hours:
8 am – 5 pm, 7 days a week

Local testing for COVID-19:

Henrico's Dorey Park:
This site is for people who have ***already been in contact with the health department***, not for the general public. It is for people who have mild symptoms and not for urgent medical care.

Recovery Supports

Many Recovery Meetings are available online or by phone. Here are links to local and nationwide resources.

RVA AA: online meetings

RVA NA: meetings can be sorted by web or phone

Robin's Hope: all groups are now on Zoom

SAARA Center: all meetings are on Zoom

Rams in Recovery: all meetings on Zoom

12 Step Yoga Recovery:
Tuesdays and Thursdays at 5:30pm
Y12SR with Billie Carroll
Tuesday https://zoom.us/j/210822932 Thursday
https://zoom.us/j/238480178
billiecarroll@verizon.net

Celebrate Recovery: Zoom – read instructions first on their web page

Other recovery meetings:

MARA (medication assisted recovery): Zoom meetings

SMART Recovery: Zoom meetings

Recovery Dharma: video conference style – must reach out prior to attending

Alive RVA

MAT available during COVID-19

Methadone:

Family Counseling Center for Recovery
905 Southlake Blvd Suite C
Richmond VA 23236
804-419-0492

Consumer calls for intake they say phone receives calls 24/7 They are also taking intakes at the Radford address.

Suboxone:

Clean Slate
101 Cowardin Ave. Ste. 202
Richmond, VA 23224
804-521-0050

(they have appointments available in their Richmond and Mechanicsville offices – call Richmond to schedule) offers Vivitrol as well

VCU Motivate
501 N. 2nd Street
Richmond,VA 23219

Ph: 804-628-6777
Fax: 804-628-6768

They are taking new referrals – they would need a referral by this agency or a doctor's referral – she said that people just can't walk up – they are doing a lot of telehealth – they only let one person in their clinic at a time and all client's temps are checked in the parking lot.

FCCR is accepting consumers for IOP at the Radford address.

Pinnacle treatment center Leesburg is currently full but may have three opening next week.

All other Pinnacle facilities are doing intakes List of MAT providers:

LOCAL MAT providers: Please contact the provider to see if they are accepting new clients.

AppleGate Recovery Virginia	204 N. Hamilton St., Suite B, Richmond, VA 23221	804-409-3866
Avenue to Wellness (ncgCARE)	5540 Falmouth, Suite 200, Richmond, VA 23230	804-433-3530
Central Virginia Health Services	25 S. Union Street, Petersburg, VA 23803	804-957-9601
Chesterfield County Mental Health Support Services	6801 Lucy Corr Blvd., Chesterfield, VA 23832	804-748-1227
CleanSlate Medical Group	101 Cowardin Ave., Richmond Virginia 23224	804-521-0050
Coleman Institute	204 N. Hamilton St., Suite B, Richmond, VA 23221	804-409-3866
Dr. Peter Breslin	5540 Falmouth Street, Suite 103, Richmond, VA 23224	804-495-8661 peterbreslinmd@gmail.com
Family Counseling Center for Recovery (FCCR) - Southlake	905 C Southlake Blvd., Richmond VA 23036	804-419-0492
Family Counseling for Recovery (FCCR) - Radford (Willow Lawn)	4906 Radford Ave, Richmond VA 23230	804-354-1996
Family Guidance of Virginia	8014 Midlothian Turnpike, Suite 202, N. Chesterfield VA 23235	804-447-3403
Human Resources	15 W. Cary Street, Richmond, VA 23220	804-644-4636
Leesburg Treatment Center of Virginia	681 Hioaks, Richmond, VA 23225	804-533-1330
MCV - Motivate Clinic	501 N. 2nd Street., Richmond, VA 23219	804-628-6776
Physical Medicine Center	5922 W. Broad St, Richmond, VA 23220	804-282-6953
Richmond Behavioral Health Authority	107 S. 5th St., Richmond, VA 23219	804-819-4000
Richmond Treatment Center (New Season)	2217 East Franklin Street, Richmond, VA 23223	877-284-7074
Right Path Treatment Center	5001 W. Village Green Dr., Suite 209, Midlothian Virginia 23112	804-292-2402
River City Integrative Counseling	5511 Staples Mill Road, Suite 300, Richmond, VA 23228	804-681-2525
River City Integrative Counseling	9510 Iron Bridge Rd, Chesterfield, VA 23832, USA	P: 804-681-2525
RPMC - Richmond Private Methadone Clinic	4926 W. Broad St., Richmond VA 23230	804-673-5241
Southside Treatment Center (New Season)	9609 Jefferson Davis, Richmond, VA 23237	877-284-7074
The Daily Planet	517 W. Grace Street, Richmond VA 23220	804-649-2119, extension 272

Virginia Center for Addiction Medicine (VCAM)	2301 N. Parham Road, Richmond, VA 23229	804-332-5950

Richmond Behavioral Health Authority	107 S. 5th St., Richmond, VA 23219	804-819-4000
Farley Center	5477 Mooretown Road, Williamsburg, VA 23188	757-280-1303
Life Center of Galax	112 Painter St Galax VA 24333	276-522-0406
Tucker Pavilion/Chippenham	7101 Jahnke Road, Richmond, VA 23225	804-330-2001
Williamsville Wellness	10515 Cabaniss Ln, Hanover, VA 23069	804-599-HELP
Pathways Lodge	1770 Earley Farm Rd, Amherst, VA 24521	434-200-4455
MCV	1250 E Marshall St., Richmond, VA 23298	804-828-1804
Bon Secours St. Francis	13710 St. Francis, Midlothian, VA 23114	804-594-7300
Richmond Community	1500 N 28th St., Richmond, VA 23223	804-225-1700
Henrico Doctor's Hospital	1602 Skipwith Road, Henrico, VA 23229	804-289-4500
Retreat Doctor's Hospital	2621 Grove Ave., Richmond, VA 23220	804-254-5100
Bon Secours - St. Mary's	5801 Bremo Road, Richmond, VA 23226	804-285-2011
Tucker Pavilion/Chippenham	7101 Jahnke Road, Richmond, VA 23225	804-330-2001
Henrico Doctor's HospitalParham	7700 Parham Road, Richmond, VA 23294	804-747-5600

Popular Springs Hospital	350 Poplar Drive, Petersburg, VA 22401	804-733-6874

Higher LOC Referral resources as of 3/24/2020

Inpatient Detox

HCA hospitals – There are currently no new restrictions on admissions for detox. The patient must meet the same criteria of lifethreatening possibility to qualify (Hx of seizures, serious co-occurring medical conditions). Medical Detox only, not substance abuse tx. Present to Emergency Room for evaluation.

Tucker Pavilion Withdrawal Management (804) 483-2290, or 483-0050 is operating with the same admission criteria, are still taking admissions at this time.

Parham Doctor's Hospital is the same criteria for inpatient detox, but are not taking admissions for partial hospitalization program at present. (804) 747-5600. Present to ER.

Bon Secours, only the St. Mary's location will admit for a medically necessary detox (same criteria), but they go to the medical unit. Psychiatric Unit does not take anyone who needs detox. Present to ER.

Partial Hospitalization

Parham Doctor's not taking new admissions

John Randolph Hospital Wellness Program is still taking admissions. Call (804) 452-3282 411 W Randolph St., Hopewell, VA 23860

IOP

Archstone Counseling and Treatment Center – (804) 288- 1788, 1007 Peachtree Boulevard, Richmond, VA 23226 . Still taking referrals and admitting for IOP. Only ten people in a room at the center, the others can join groups by video links. They run 2 groups daily, a morning and an evening. Take Medicaid and private insurances.

Civitas Health Services (804) 737-3917 5705 S. Laburnum Avenue, Richmond, VA 23231 Accepting referrals, doing admissions. 2 groups a day – morning and evening. Take Medicaid and Private insurance **Residential**

RBHA North/Hope- New Admissions on hold (804)726-1740

Phoenix House – Screening carefully, but admissions are possible (703)841-0703 ext 3046, Gabby Freeman or (540)446-3929 Cindy Blanton

Life Center of Galax – Taking admissions from this area with some extra screening questions (276) 236-2994 Ext 1 for admissions

Bethany Hall – (540) 343-4261 Ext 301,303. Nothing has changed, still doing intakes.

The Womens Center at Moore's Creek (434) 970-9310 Closed down at this time

The Mohr Center Mens Treatment (434) 972-1745 Closed down at this time

Crisis Stabilization Unit

CSU - (804)343-7691, 107 S. 5th Street, Richmond, VA 23219 – Taking admissions at this time, holding census to 9 people. Have male and female beds, bed availability changes every day. Must have a mental health crisis to be admitted. Will detox if that is also needed.

Domestic Violence:

In this time of social distancing and unusual practices, please know the **Domestic and Sexual Violence Resource Center** remains available to assist with DV/SV needs.

Domestic & Sexual Violence Resource Center

Victims Who Need Assistance - Call 911

- **Police Non-Emergency**
  Phone: 804-748-1251 or Phone: 804-318-8110

The Chesterfield County Domestic and Sexual Violence Resource Center works closely with State, County, and community agencies, serving as the hub of the County's coordinated community response to domestic and sexual violence.

The Domestic and Sexual Violence Resource Center is located within the Chesterfield County Community Corrections Services and the Chesterfield Juvenile and Domestic Relations Courthouse.

We Provide

We provide the following:

- Community education and awareness
- Direct services to victims of domestic and sexual violence, such as:
  - Assistance with protective orders
  - Civil and criminal justice advocacy
  - Court accompaniment
  - Crisis intervention
  - Information and referrals to community resources
  - Risk assessment
  - Safety planning

Contact Us

Lindsay G. Cassada
Coordinator, DSVRC
Email Lindsay G. Cassada
Phone: 804-318-8265

Domestic & Sexual Violence Resource Center

Physical Address
10111 Krause Road
Suite 210
Chesterfield, VA 23832

Mailing Address
P.O. Box 741
Chesterfield, VA 23832

Phone: 804-318-8264
Fax: 804-717-2492
Emergency: 911

Client Services
804-318-8264

Hours
Monday - Friday
8 a.m. - 4:30 p.m.

Simple steps for 12 step groups using various virtual platforms for meetings

Great quick start information on Zoom, Google Hangouts, and FreeConferenceCall:
https://www.nyintergroup.org/remote-meeting-listing/help-setting-up-online-meetings/#zoom

Example of Flyer being used to publicize meetings. This flyer is sent to group members via email and text, posted on this AA District Website and posted on door of church that is closed in an attempt to reach anyone who shows up for a meeting.

Nuts and Bolts om flyer.pdf

To host a meeting on zoom:

1. Set up a free account here: https://zoom.us
   When you set up a free account, you can only host a meeting for 45 minutes. To host longer meetings, you need a paid account ($120 a year or about $18/month).
2. How to schedule a meeting (the video is the most helpful):
   https://support.zoom.us/hc/en-us/articles/201362413-Scheduling-meetings
3. How to invite people to join a meeting :
   https://support.zoom.us/hc/en-us/articles/201362183-How-do-I-invite-others-to-join-a-meeting- Simple

zoom use instructions:

- Menu bar is at the bottom of the screen when you are in zoom on a computer, at the top on a mobile devise.
- Use Mic and Video icons to turn on mic and camera.
- Click on Up Arrow located to right of microphone icon to test speakers and microphone on your computer.
- Host can use Manage Participants Icon to see who is online and mute people if needed, including muting everyone.
- Chat Icon can be used by participants to communicate via chat