COMPREHENSIVE NUTRIENT MANAGEMENT PLAN

ARIZONA SAMPLE PLAN

Prepared by
USDA - Natural Resources Conservation Service
July 2002

TABLE OF CONTENTS

CNMP		Page
Section 1	- Title Page	1
Section 2	- Introduction to the Plan	3
Section 3	- Aerial Photos/Sketches (Soils Map, Plan Maps, Sketches)	9
Section 4	- CNMP Contract Support Document (Toolkit Generated Plan Document)	16
Section 5	- Emergency Action Plan	18
Section 6a	- Animal Outputs – Production, Collection Transfer and Storage Summary	22
Section 6b	- Nutrient Accounting Phosphorus Index Worksheet for Arizona (Existing) Phosphorus Index Worksheet for Arizona (Planned) Nutrient Budget Based on Nutrients Removed by Crops	23
Section 6c	- Record Keeping – Animal Outputs Nutrient Application Summary Table Fertilizer and Manure Application Record Crops Record Keeping Soil Testing Procedures Application Equipment Calibration	32

Appendix

NRCS State Standard, 590 - Nutrient Management
Phosphorus Assessment Tool Technical Note
Dairy Inventory Worksheet
Runoff Calculations
Soil Investigations (Geology)
Lagoon Capacity Calculations
Operation and Maintenance Plans
Surveying Map
Evaporation Calculations
Engineering Drawings
Environmental Evaluation
List of Testing Laboratories
References

Notice to NRCS Employees

This is a "SAMPLE" Comprehensive Nutrient Management Plan (CNMP). Please use the information as a guide for your office when assisting a customer with their CNMP. Consider the NRCS planning process and note the organization of the document, i.e. location of maps, sketches, calculations, narrative summaries, and planning documents.

Sample
Comprehensive Nutrient Management Plan
PLANNING CONSIDERATIONS

This sample Comprehensive Nutrient Management Plan (CNMP) is an example of a conservation system developed for an Animal Feeding Operation (AFO). The Plan is comprised of two major elements: a Best Management Practices Plan (BMPP); and a Nutrient Management Plan (NMP). Each of these elements contains a number of essential components, which are described in detail within the Plan. Several components, such as soil and site maps, and record keeping, are integral to both the BMPP and NMP.

The CNMP is implemented in conjunction with additional necessary conservation practices, such as irrigation water management, residue management, pest management, and other practices needed on a site-specific basis to address natural resource concerns and landowner objectives. The conservation practices and management activities planned and implemented as part of a CNMP must meet NRCS technical standards. When implemented, the CNMP will help to ensure that both production and natural resource protection goals are achieved.

BMPP Components

The BMPP element of the CNMP identifies and describes all physical conservation practices necessary for the proper management and use of manure, wastewater, and other nutrient resources.
BMPP components include:

1. Manure and Wastewater Production, Handling, Transfer, Treatment, and Storage.
   This component addresses the conservation practices and activities associated with the production facility, feedlot, manure and wastewater treatment and storage structures and areas, and any areas or mechanisms used to facilitate transfer of manure and wastewater. In most situations, addressing this component will require a combination of physical conservation practices and management activities to meet the production needs of the landowner/operator and environmental concerns associated with the production facility.

2. Land Treatment Practices.

   This component addresses evaluation and implementation of appropriate conservation practices on sites proposed for land application of manure and wastewater from an AFO. On fields where manure and wastewater will be applied as beneficial nutrients, it is essential that runoff and soil erosion be minimized to allow for plant uptake of these nutrients. An understanding of the present land use of the fields is essential in developing a conservation system to address these concerns.

3. Record Keeping.

   It is imperative that records are kept to effectively document and demonstrate implementation activities associated with the BMPP. It is the responsibility of AFO owner/operator to maintain records which document the implementation of the Plan.

NMP Components

The NMP element of the CNMP identifies and describes all management conservation practices necessary for the proper management and use of manure, wastewater, and other nutrient resources.
NMP components include:

1. Providing Site Maps, including a Soil Map

These maps are part of the overall conservation plan, and can be aerial photographs, computer generated, geographic information system (GIS) maps and printouts, hand-drawn sketches, or any another acceptable format. Information will be specific for the land where nutrients are to be applied. This information will include field boundary and acreage, location of any sensitive areas, soil types present and their associated soil interpretation, plus any other pertinent information.

2. Location and Description of Sensitive Resource Areas

If present, sensitive resource areas will be delineated on the site map. Sensitive areas may be highly erodible land, sole-source aquifer recharge areas, soils that are highly leachable, fields that have a high risk for phosphorus transport, or areas in close proximity to neighborhoods or public areas. Sensitive areas usually require some form of reduced or restricted nutrient application. Assessment tools and maps to determine sensitive areas are available in the NRCS Field Office Technical Guide (FOTG).

3. Soil, Plant, Water, and Organic Material Sample Analysis Results

Nutrient management is based on crop requirements and the resources available to supply these crop nutrients. All appropriate sample analyses will be part of the nutrient management component. These analyses become basic information to complete the nutrient budget. Appropriate explanation of each analysis should to be presented to the producer.

4. Current or Planned Crop Production Sequence or Crop Rotation

Nutrient application is based on crop requirements. The planned crop rotation will determine the nutrient needs, nutrient carryover to subsequent crops, and windows of opportunity to apply organic waste material. A three to five year history of past, present, and future crops is essential for planning nutrient management.

5. Expected Yield

The expected crop yield is the basis for determining the level of nutrients required for that particular crop. Generally, the higher the yield the higher the nutrient requirement. There are a number of methods available to determine expected yield. Soil, climate, crop variety, and management skills are all factors. Consult with the state land grant university for acceptable methods used to determine expected yield.

6. Quantification of All Nutrient Sources Available

Nutrient sources may include soil reserves, commercial fertilizer, animal manure and other organic waste products, irrigation water, atmospheric deposition, and legume credits. Estimates of nutrient sources are determined by laboratory analysis or crop history.

7. Develop a Nutrient Budget for the Planned Crop Rotation

A nutrient budget determines the amount of nutrients available from all sources and compares this to the amount of nutrients required to meet the expected yield. If the crop yield requirement for nutrients exceeds the currently available sources, then an additional source of nutrients is needed. If nutrient supplies exceed crop requirements, however, then management measures must be taken to ensure the excess nutrients are either reduced or their application will not cause detrimental effects to plants, soil, water, or air resources.

8. Recommended Rates, Timing, and Method of Nutrient Application

These three specifications for nutrient application are given to the producer. All three specifications are part of the nutrient management element plan. The rate of nutrient application depends on the results of the nutrient budget. Timing is determined by crop growth stage, field conditions for application equipment, and climatic conditions that can affect the transformation and transport of nutrients. How the nutrient is applied will be based on its form and consistency, soil and weather conditions, and potential for movement or loss to the environment.

9. Operation and Maintenance of the Nutrient Management Plan

A number of management items need to be reviewed and updated on a regular basis. Soil tests will be taken periodically to track soil reserves. Application equipment will be calibrated to supply uniform and precise amounts of nutrients. A safe working environment will be maintained while handling and storing nutrient products. Records of nutrient application also will be kept by the producer.

SAMPLE
Comprehensive Nutrient Management Plan

For:

Le Grand Merd Dairy
(Directions to Dairy from P.O.)
(US 87 North 4 miles, West on Many Farms Rd 1.25 miles, Dairy is on the south side of road)
(911 Coordinates: 123556 Many Farms Road)

123556 Many Farms Rd.
Where Are We, Arizona 88888

Phone Numbers
John Dudu (555) 555-5555
Kathy Rose (555) 555-2345

July 2002
Prepared in Cooperation with the:
USDA – Natural Resources Conservation Service

And

Natural Resource Conservation District

Field Service Center
789 Field Office Road
Where Are You, Arizona 99999
(480) 123-4567

The U.S. Department of Agriculture (USDA) prohibits discrimination in all its programs and activities on the basis of race, color, National origin, sex, religion, age, disability, political beliefs, sexual orientation, and marital or family status. (Not all prohibited basis apply to all programs.) Persons with disabilities who require alternative means for communication or program information (Braille, large print, audiotape, etc.) should contact USDA's TARGET Center at (202) 720-2600 (voice and TDD). To file a complaint of discrimination, write USDA, Director, Office of Civil Rights, Room 326W, Whitten Building, 14th & Independence Avenue SW, Washington, DC 20250-9410 or call (202) 720-5964 (voice and TDD). USDA is an equal opportunity provider and employer.

Sample Planning Considerations for CNMP

In planning the Comprehensive Nutrient Management Plan portions of this conservation plan, consideration was given to each of the potential components that might be included in the CNMP. These include:

- ❑ Manure and Wastewater Production, Handling, Transfer, Treatment, and Storage
- ❑ Land Application of Manure and Wastewater
- ❑ Nutrient Management
- ❑ Record Keeping
- ❑ Other Utilization Activities

This plan includes practices and management activities only for the CNMP elements checked. The farm has adequate acres for the utilization of the manure generated by the cows. A hired animal nutritionist dictates the ration mixes for the cows. NRCS Arizona will consider feed management during the planning process. However, it is recognized that feed management may not be a viable or acceptable alternative for all Animal Feeding Operations (AFOs). If the operator is interested in feed management alternatives, a professional animal nutritionist will be consulted before making any recommendations associated with feed ration adjustment.

Sample CNMP Signature Page

OWNER/OPERATOR:	PHONE:
Owner/Operator Address	
Farm(s) #:	Tract(s) #:

The following people have assisted in the development of the CNMP and certify that their element meets applicable technical standards.

Manure and Wastewater Handling and Storage

Signature_____ Date: _____
Name:
Title:

Land Treatment Practices

Signature_____ Date: _____
Name:
Title:

Nutrient Management Component

Signature_____ Date: _____
Name:
Title:

Other Utilization Plan Component

Signature_____ Date: _____
Name:
Title:

Certified Conservation Planner
As an approved Conservation Planner, I certify that I have reviewed this CNMP for technical adequacy and that the elements of the CNMP are technically compatible, reasonable, and applicable in the field.

Signature_____ Date:_____
Name:
Title:

NRCD Review
The NRCD has reviewed the CNMP and concurs that the plan meets the NRCD goals.

Signature_____ Date:_____
Name:
Title:

Owner/Operator
As the owner/operator of this CNMP, I certify that I, as the decision-maker, have been involved in the planning process and agree the items/practices listed in each element are needed. I understand that I am responsible for keeping all the necessary records associated with the implementation of this CNMP. It is my intent to implement/accomplish the CNMP in a timely manner as described in the plan.

Signature_____ Date:_____

SAMPLE CNMP Purpose and Conditions

Purpose:
Manure and nutrient management is managing the source, rate, form, timing, placement, and utilization of manure, other organic by-products, bio-solids, and other nutrients held in the soil and residues of prior crops. The goal is to effectively and efficiently use nutrient resources to adequately supply soils and plants while minimizing the transport of excess nutrients to groundwater and surface water. The Comprehensive Nutrient Management Plan (CNMP) is a component of your Conservation Plan. It is used in conjunction with crop rotations, residue management, pest management, and/or other practices needed on a site-specific basis to address natural resource concerns and landowner objectives.

Nitrogen and phosphorous are the two nutrients most often identified as impairing ground and surface water quality. Nitrogen leaching out of the root zone can be transported to surface water or leach to ground water. Nitrogen levels above 10 PPM in water are a health risk. Phosphorous leachate or runoff entering surface waters contributes to excessive algae growth. This impairs aquatic life and contributes to bad tasting drinking water. This manure and nutrient management plan minimizes the transport of nitrogen and phosphorous to groundwater and surface water**.**

Conditions:
The US Environmental Protection Agency, National Pollutant Discharge Elimination System (NPDES) permit for Arizona requires that waste (manure, milk house waste, etc.) be managed so it does not enter the waters of the State. Your CNMP provides the basic information on how the wastes produced from your operation, and/or applied on your fields, will be utilized. Following your CNMP will insure that your facility meets NRCS standards.

Note: If the number of livestock changes, fields change, the crop rotation changes, the method of livestock waste storage changes, or if the method of waste application needs to change, contact your local NRCS office to get your plan revised.

If manure or process wastewater is applied to land under the operational control of the permittee, the permittee shall not apply manure or process wastewater unless he/she has a Nutrient Management Plan (NMP). The land application rate should not exceed the capacity of the soil and the planned crops to assimilate nutrients based on the most limiting nutrient in the soil (e.g., phosphorus or nitrogen), type of crop, realistic crop yields, soil type, and all nutrient inputs in addition to those from the manure or process wastewater. The permittee shall not land apply manure or process wastewater in excess of the land application rate, determined under the NMP.

If the permittee transfers manure or processes wastewater generated at the CAFO to another person for off-site land application, the permittee must:

i. provide to the applier the nutrient values expected to be found in the manure or process wastewater.

ii. inform the applier of the requirements of Arizona Administration Code Title 18, Chapter 9, Article 4, pertaining to Agricultural General Permits.

iii. record the amount of manure or process wastewater that leaves the permitted operation, and

iv. for quantities greater than 100 tons provided to a single recipient per week, record the name and address of the recipient.

Sample
Comprehensive Nutrient Management Plan
Summary and Overview

Description of the Existing Setting:
The dairy consists of 1,350 acres of irrigated cropland, 50 acres of irrigated pasture, and 36 acres in the Dairy Headquarters, corrals, milking facilities, and storage areas. The farm consists of three (3) different tracts of land.

The dairy enterprise consists of a dairy located at the headquarters in Some County, Arizona. The cropland production system produces alfalfa, corn silage, oat silage, sorghum silage, and Sudan grass. The irrigated pasture contains Bermuda grass, which is grazed by approximately 110 dry cows.

Concerns and Opportunities:
1. Utilization of cow manure, dairy wastewater effluent, and their nutrients.
2. Pests (fly control) from the cow manure.
3. Drainage and runoff during temporary storage of the wastewater at the headquarters.
4. Nutrient management for the cropland (over or under applying cow manure and wastewater and balancing commercial fertilizer needs.)
5. Pest management (weeds, insects, and diseases) related to crop production.

Goals:
1. Obtain maximum nutrient benefit from dairy waste while minimizing leaching or runoff of the nutrients.
2. Utilize excess dairy manure off the farm (sell).
3. Maintain and improve the economic return from the dairy operation and crop production system.
4. Operate the farm in an environmentally and socially acceptable manner.
5. Contain the 25yr-24hr storm event(s) and planned effluent storage.

Waste Management Facilities:
About 860 Holstein cows are milked twice daily. On site there are 100 dry cows, 840 heifers, 120 bulls raised as calves then sold, and 21 bulls for breeding. There are 12 open corrals, one hospital pen, and one holding area and milk parlor. The dairy has been in operations since 1980. Several improvements were made over the years. In 1994 the holding area sprinklers were changed from impact heads to low flow pray heads. In 1999 and 2000 a pipeline, a static side hill screen, and stacking bunker were installed. At the same time several concrete block inlet control structures were installed in and around the waste storage lagoon. In July 2000, a floating platform pump was placed in the waste storage lagoon to transfer effluent for utilization on irrigated cropland.

PRODUCTION
The dairy produces approximately 80-acre feet of effluent and 3,599 tons of organic solids in the corrals and milking area annually. Sprinklers are used in the holding area to clean cow udders prior to each milking. A parabone 16 (32 stall) milking parlor was recently installed. The parabone is designed to milk 160 cows per hour.

TRANSFER

Wastewater (effluent) and manure excreted in the milk parlor is stored in an existing sump, on the south side of the parlor, before transfer through an existing pipeline to a static side hill screen. The screen was installed in January and February 2000.

PRE-TREATMENT

Approximately 30 percent of the Total Solids[1] (TS) will be separated passing over the side hill screen. Remaining liquids and solids in suspension will gravity flow from the storage bunker pad to an existing storage lagoon. The screen is operational. The bunker floor is not capped around the edges to capture liquids as they seep away from the stacked manure. The liquids drain off the bunker floor over the soil surface to an existing inflow point of the waste storage lagoon. It is recommended that the floor be sloped and capped around the edges to capture liquids, then tied into the existing PVC drainpipe to the lagoon.

TREATMENT AND STORAGE

The existing waste storage lagoon is approximately 910 feet long by 34 feet wide. Depth varies from 7 feet to 18 feet. Storage capacity is estimated to be 8.43 acre-feet. All storm water run-on from the dairy flows to the lagoon (housing, corrals, storage areas, and milking parlor, etc.). The elevation of Many Farms Road and the size of the storm water retention basins on the north side of the road capture and contain the run-on from the surrounding watershed. An earthen dam north east of the dairy also captures the storm events from the upper watershed. A 25yr-24hr-storm event results in 6-acre feet of run-on to the lagoon.

The operator does have the flexibility to pump wastewater from the storage lagoon to an existing irrigation storage reservoir. The wastewater can be applied to several fields in the event of excessive winter rains. However, the utilization schedule of lagoon wastewater on agronomic crops provides capacity for the waste storage lagoon to receive run-on from a 25-year storm event at any time.

The waste storage lagoon is inoculated with facultative bacteria to increase digestion of manure solids. Solids digestion will increase effective storage capacity and reduce the risk of clogging sprinkler nozzles.

Organic solids are stored in the corrals (drylot). The corrals are scraped and the manure is applied to cropland owned by the operator. Approximately 3,599 tons of organic solids are stored annually.

LIQUIDS UTILIZATION

Approximately 80 acre-feet of effluent are applied to crops. During non-irrigation months effluent accumulates in the storage lagoon. Liquids are transferred from the storage lagoon using a floating platform pump (installed in July 2000) to one of the following:

- an existing concrete lined ditch to a traveling gun sprinkler system, or
- an existing pipeline and irrigation storage reservoir and applied through at least three center pivot irrigation systems.

According to the manufacturer's pump curves, the designed output of the platform pump is 500 gpm. About 250 gpm is lagoon effluent and 250 gpm is surface irrigation water. If the traveling gun operates for 24-hours, then 360,000 gallons of effluent are pumped from the lagoon.

[1] Per data from the manufacturer, AgPro.

SOLIDS UTILIZATION

Manure solids are stored in the corrals (drylot). The corrals are scraped and manure is applied to cropland owned by the dairy operator. This occurs during field preparation for spring or fall crops.

Crops grown include Alfalfa, Corn, Barley, Sorghum, Oats, Sudan, and Bermuda grass pasture. All listed crops, except the pasture, are used as silage or haylage.

SOILS MAP

OWNER ***Le Grand Merd Dairy*** **OPERATOR** ***Le Grand Merd Dairy*** **Date** **11/02/01** **State** **AZ**

County ***Some*** **State** ***Arizona***

Soil Survey sheet (s) or code nos. ***From digitized data*** **Approximate scale** ***1:20,000***

Prepared by the U.S. Department of Agriculture, Natural Resources Conservation Service cooperating with Arizona Natural Resource Conservation District

N

Farm Soils Information

Le Grand Merd Dairy

SOIL UNIT (Map Symbol and Name)	LAND CAPABILITY UNIT	Depth of Principle Layers	TEXTURE	AVAILABLE WATER HOLDING CAPACITY (in/ft)	OUTSTANDING OR LIMITING FEATURES	SOIL INTAKE RATE (in/hr)
Co – Contine clay loam	**IIs-8**	**0 – 12** **12 - 38** **38 - 47** **47 – 66**	**CL** **CL** **CL** **CL**	**2.4** **1.86** **2.16** **2.22**		**.3 surface** **.3 sprinkler**
LaV – Laveen loam	**I-1**	**0 –13** **13 – 60** **60 – 70**	**L** **L** **GR-FSL**	**1.8** **1.8** **1.32**		**.5 surface** **.3 sprinkler**
Mv – Mohall loam	**I-1**	**0 –10** **10 – 27** **27 – 37** **37 - 60**	**L** **SCL** **L** **GR-SL**	**1.86** **2.22** **1.86** **1.62**		**.5 surface** **.3 sprinkler**
Ve – Vecont clay	**IIIs-3**	**0 – 14** **14 – 41** **41 – 60**	**CL** **CL** **L, CL**	**1.8** **1.92** **2.04**		**.1 surface** **.1 sprinkler**
9 – Contine clay loam	**IIs-8**	**0 – 12** **12 – 38** **38 – 47** **47 – 66**	**CL** **CL** **CL** **CL**	**2.4** **1.86** **2.16** **2.22**		**.3 surface** **.3 sprinkler**
10 – Contine clay	**IIs-8**	**0 – 12** **12 – 38** **38 – 47** **47 - 66**	**C** **C** **CL** **CL**	**2.4** **1.86** **2.16** **2.22**		**.3 surface** **.3 sprinkler**

↑
N

Dairy Site Plan Map

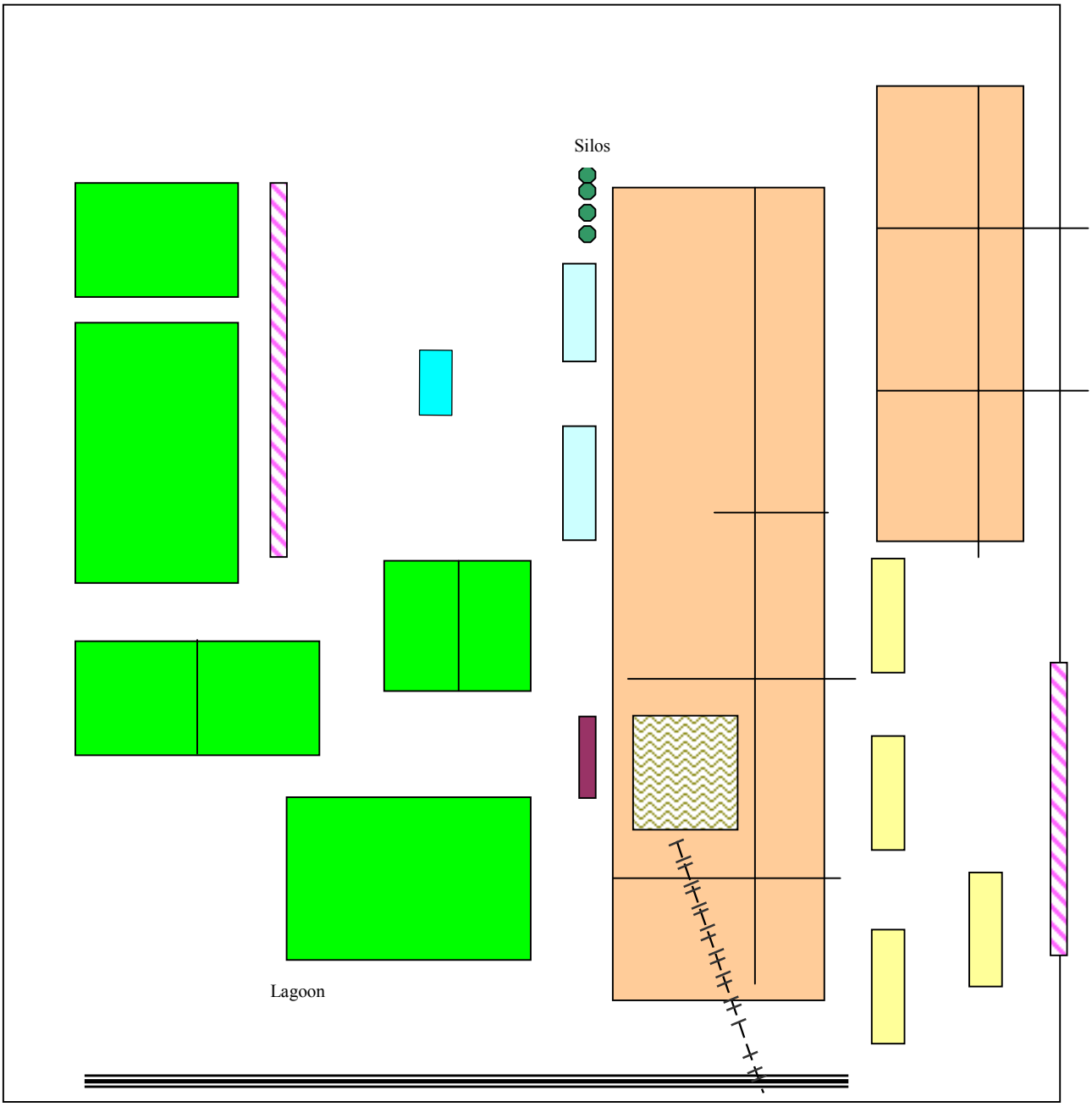

Legend

Cow corrals
Hay storage
Office
Holding Pen and Milk Parlor
Abandoned Pits
Many Farms Road
Pipeline from sump to screen
Calf Pens
Lagoon
Shop
Silos

CONSERVATION PLAN MAP

OWNER ***Le Grand Merd Dairy*** **OPERATOR** ***Le Grand Merd Dairy*** **Date** **11/02/01** **State** **AZ**

County **Some** **Approximate acres** **Dairy = 36.4 acres** **Irrigated cropland = 1,400 acres** **Irrigated pasture = 50 acres**

Cooperating with the ***Arizona Natural Resource Conservation District*** **Approximate scale** **8" = 1 mile**

Plan identification ***Comprehensive Nutrient Management Plan*** **Photo Number** **N/A from digitized imaging**

Assisted by ***Sample Conservationist*** **USDA Natural Resources Conservation Service**

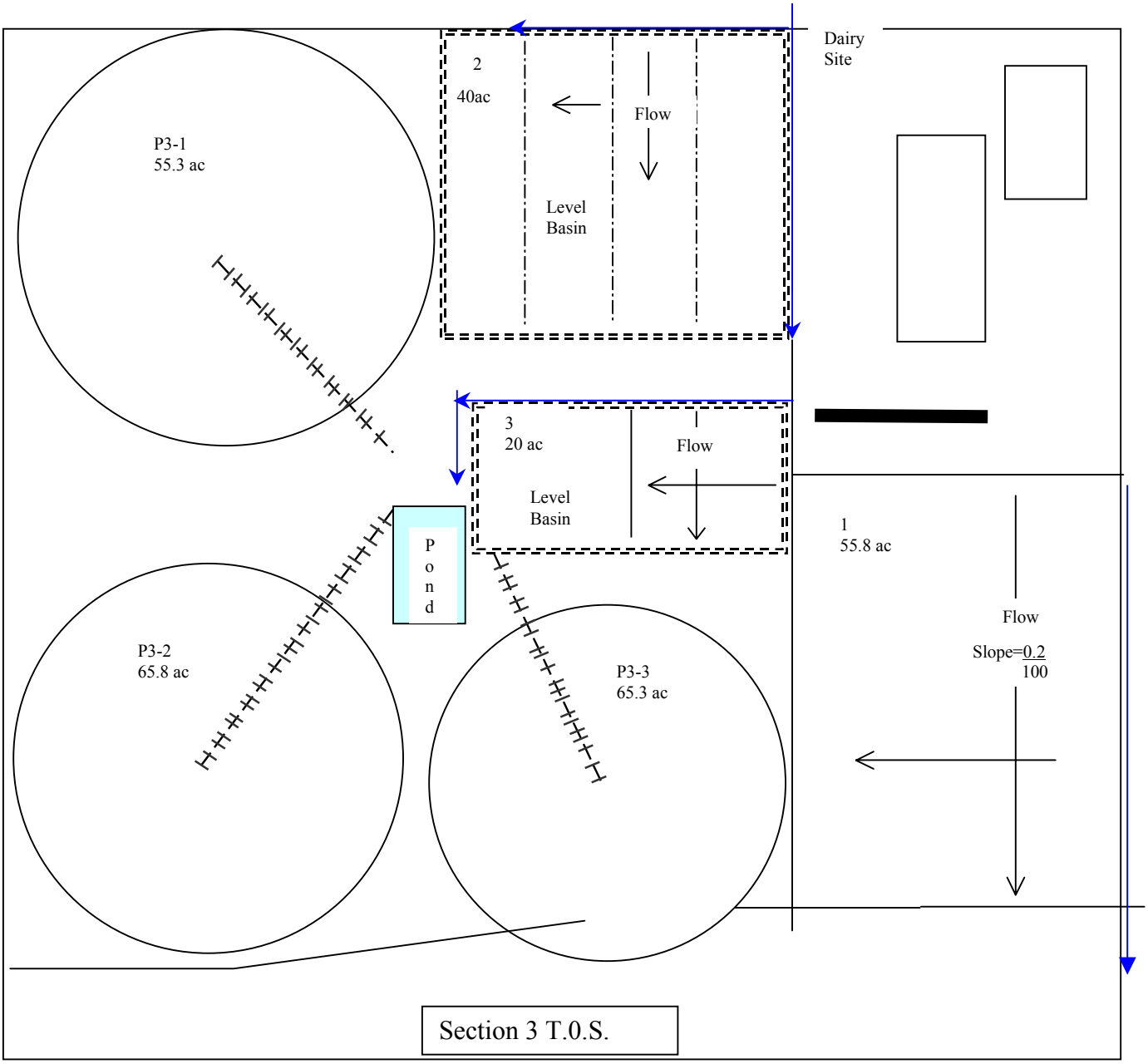

Conservation Plan Map (Continued)

Section 1 T.0.S. R.0.E

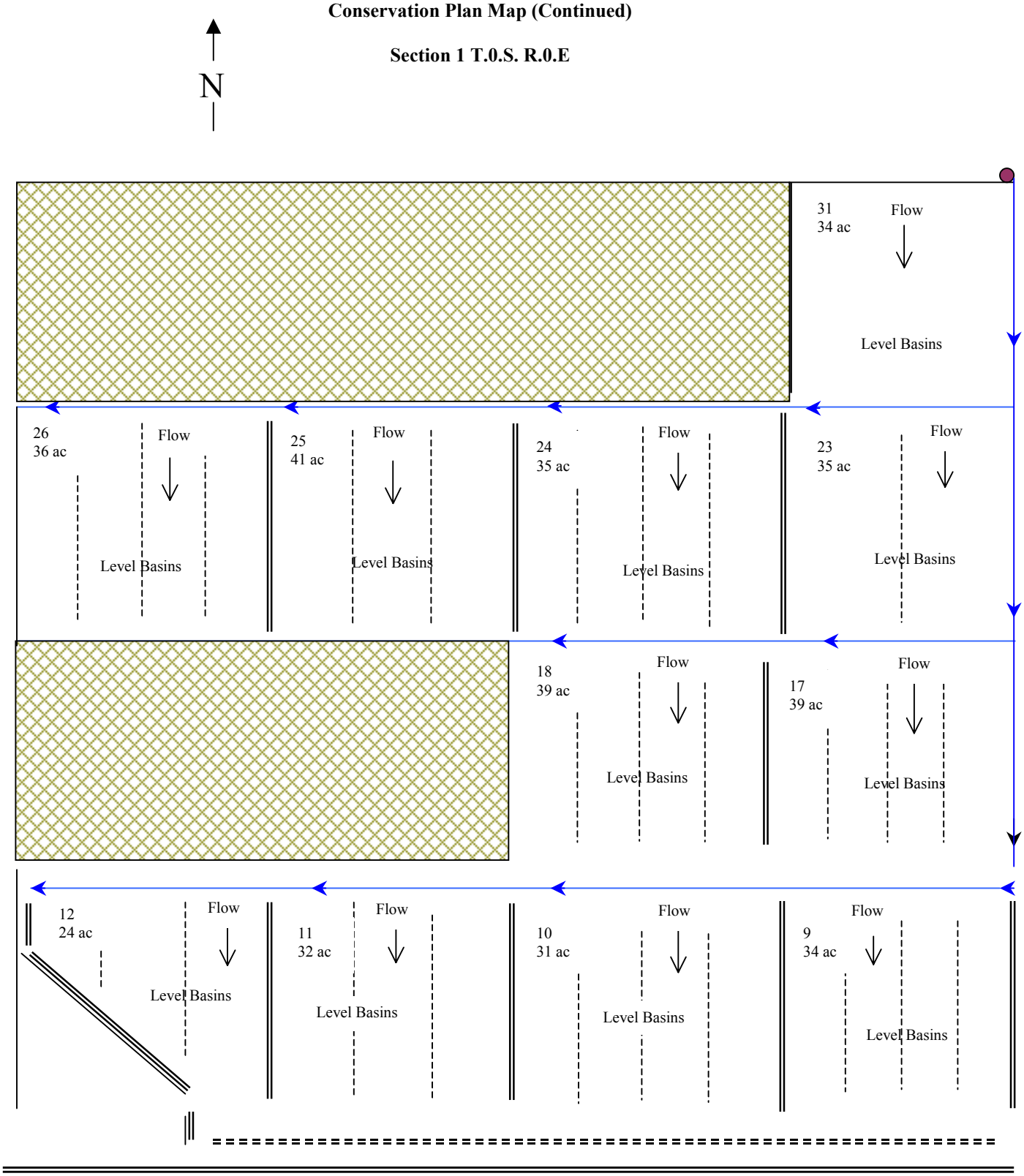

Conservation Plan Map (Continued)

Section 2 T.0.S. R.0.E

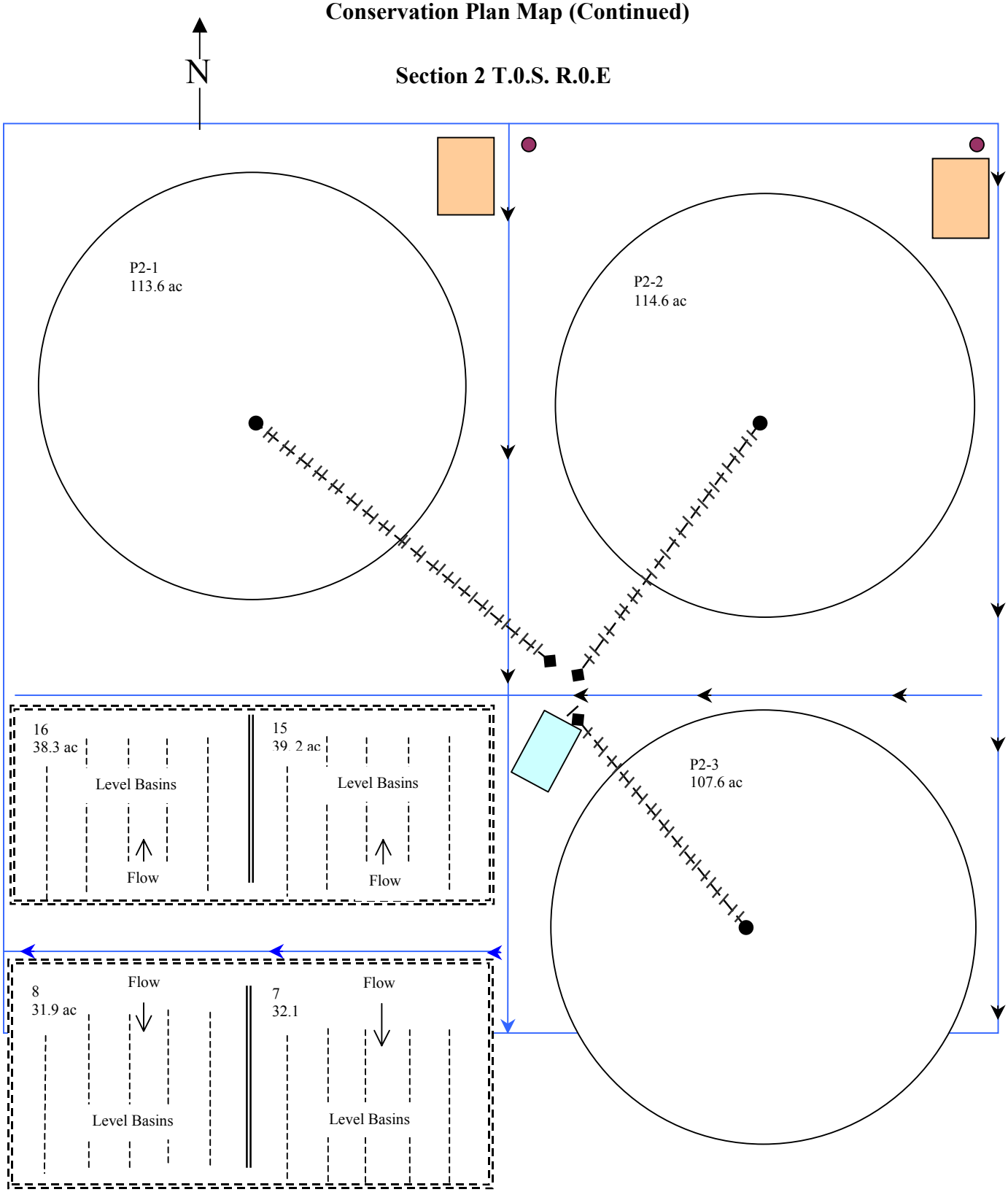

Conservation Plan Map Legend

CAP Turnout

Center Pivot

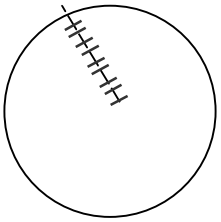

Concrete Ditch

Many Farms Road

Irrigation Storage Reservoir

House

Desert

Pipeline from reservoir to pivot point

Dairy Site

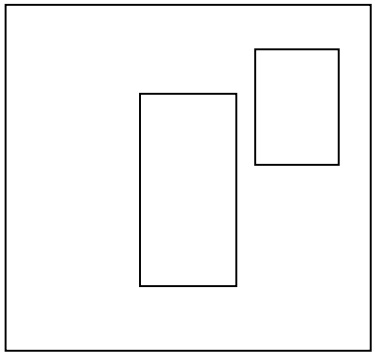

Level Basin Field
6 to 10 acres per basin

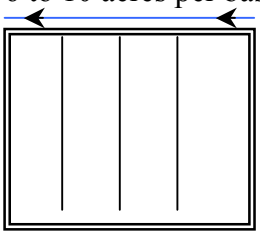

Natural Resources Conservation Service
Higley FO
18256 E. Willams Field Road Suite 1
Higley, AZ 85236
4809881078

NRCS-LTP-11-E

Contract Support Document

Le Grande Merde Dairy
123556 Many Farms Road
Where Are We, AZ 88888

Contract Number: 2002-2001

Tract	Field	Item #	Planned Conservation Treatment	Estimated Amount	Units	Cost / Unit	Program	Cost Share	2002	2003	2004	2005
		1	Fence (382)									
1050	Dairy											
			Construct a fence for use as a barrier to wildlife, livestock, or people.									
		1a	Standard - 4 Wire (smooth country)	10,000.0	lf	$0.75	EQIP	75.0%		$5,625		
		2	Waste Treatment Lagoon (359)									
1050	Dairy											
			An impoundment is built for biological treatment of animal or other agricultural waste to reduce pollution and protect the environment.									
		2a	Waste Treatment Lagoon	56,000.0	cu.yd.	$1.25	EQIP	75.0%		$52,500		
		3	Irrigation Water Conveyance, Pipeline, Low-pressure, Underground, Plastic (430EE)									
1050	Dairy											
			Install underground pipeline and appurtenances to reduce erosion and seepage.									
		3a	Low-pressure, Underground, Plastic 4 inch dia.	1,800.0	lf	$1.68	EQIP	75.0%			$2,268	
		4	Pumping Plant for Water Control (533)									
1050	Dairy											
			Install a pumping facility to transfer water for a need(s).									
		4a	Pumping Plant for Water Control	1.0	ea	$5,000.00	EQIP	75.0%			$3,750	
		5	Structure for Water Control (587)									
1050	Dairy											
			Install water control structures as needed. These can include ditch check gates, culverts, field turnout structures, and measuring weirs.									
		5a	21" CMP	30.0	lf	$24.30	EQIP	75.0%				$547
		6	Waste Utilization (633)									
1050	Dairy											
			Agricultural waste or other waste is safely applied on land to provide nutrients for crop, forage or fiber production in an environmentally acceptable manner that maintains or improves soil and plant resources.									
		6a	Waste Utilization	35.6	ac	$18.00	EQIP	75.0%				$481
		7	Nutrient Management (590)									
1050	Dairy											
			Best Management Practices to be used for the proper application of fertilizers and organic matter.									
		7a	Nutrient Management	35.6	ac	$9.00	EQIP	0.0%	$0			
			Total Cost-Share by Calendar Year						$0	$58,125	$6,018	$1,028

Total Contract Cost-Share	$65,171

NOTES:
A. All items numbered under "Item #" must be carried out as part of this contract to prevent violation.
B. When established, the conservation practices listed as "Planned Conservation Treatment" must be maintained by the participant at no cost to the government.
C. Enter total cost per unit under "Cost/Unit" unless the method of cost-share is flat rate. When flat rate, enter the amount per unit to be paid to the participant.
D. All cost share rates shown under "Cost Share" are based on average cost (AC) with the following exceptions:

AA = Actual costs not to exceed average cost
FR = Flat rate
NC = Non cost-shared
AM = Actual cost not to exceed a specified maximum

This information is used in both the development and implementation of a Conservation, Reclamation or Water Quality plan as the basis for technical assistance and/or cost sharing. The authorities for such work are: 16 U.S.C. 590a-f (Soil and Water Conservation); 16 U.S.C. 590h(b) (Agriculture Conservation); 16 U.S.C. 590p(b) (Great Plains); 30 U.S.C. 1236 et seq. (Rural Abandoned Mine Reclamation); 43 U.S.C. 1592(c) (Colorado River Basin Salinity Control); The Food Security Act of 1985, Public Law 99-198; Federal Agriculture improvement and Reform Act of 1996, Public Law 104-127 and the regulations promulgated thereunder. Furnishing information is voluntary and will be confidential; however, it is necessary in order to receive assistance.

By signing, the participant acknowledges receipt of this practice schedule and agrees to comply with the terms and conditions hereof.

CERTIFICATION OF PARTICIPANTS

Le Grande Merde Dairy _____ Date _____

NONDISCRIMINATION STATEMENT

The U.S. Department of Agriculture (USDA) prohibits discrimination in all its programs and activities on the basis of race, color, national origin, sex, religion, age, disability, political beliefs, sexual orientation, or marital or family status. (Not all prohibited bases apply to all programs.) Persons with disabilities who require alternative means for communication of program information (Braille, large print, audiotape, etc.) should contact USDA's TARGET Center at 202-720-2600 (voice and TDD).

To file a complaint of discrimination, write USDA, Director, Office of Civil Rights, Room 326W, Whitten Building, 14th and Independence Avenue, SW, Washington, DC 20250-9410 or call (202) 720-5964 (voice and TDD). USDA is an equal opportunity provider and employer.

Emergency Response Personnel

Name	Home Phone	Cell Phone	Pager

Recovery Equipment

Equipment	Location
Sand bags (20 - 25)	
Absorbent pads (10 - 15)	
Backhoe	
Dozer	
Tractor and Vacuum Tank	

Operation and Maintenance – Emergency Action Plan

Initiate Action Plan

Spills From Containment Breaches or Structure Failures

1. Construct an earthen dike to contain or divert spill away from tiles, watercourses, ditches, roadways, and fresh water sources.
2. Relieve containment of manure sufficient to cease the unplanned release of manure.
3. Setup equipment and procedures to secure the containment from further uncontrolled releases until proper repairs are made.
4. Remove spill from diked area with vacuum tank.

Spills During Pumping Operations

1. Shut off all pumping equipment.
2. Build a sand bag dike to contain or divert spills away from tiles, watercourses, and roadways.
3. Use absorbent pads to stop leaks in dike.
4. Remove spill from diked area with vacuum tank
5. If larger dike is necessary, use backhoe to reinforce with soil barrier.

Spills During Transportation on Public Roadways

1. Coordinate efforts with local law enforcement and emergency personnel.
2. Contain spill or divert manure away from watercourses and roadways.
3. Wash manure from roadways and public use areas into the containment or diversion structure.
4. Remove spill from diked area with vacuum tank.

Clean-up Spill Area

1. Break down dike.
2. Dry out sandbags.
3. Discard any absorbent pads used.
4. Level any soil disturbance and incorporate residue.
5. Replace any discarded or damaged equipment.

Take additional containment measures, corrective measures, or property restoration measures.

Operation and Maintenance – Emergency Action Plan

Spill Reporting

If the spill ***HAS ENTERED*** a water supply or public waters of the State, immediately notify the proper agency listed.

Name	Home Phone	Cellular Phone	Pager

If the spill ***DID NOT*** enter a water supply or public waters of the State, notify the management personnel listed below.

Name	Home Phone	Cellular Phone	Pager

Attached Maps

1. Locations of all supply lines used to transport manure to fields
2. Local road map showing all routes used to transport manure on public use roadways.

Custom Applicator

I have received and agree to follow this emergency spill recovery plan and reporting protocol. I will land apply the manure from this facility using Best Management Practices. I agree to monitor all application equipment and prevent runoff due to the application process. In the event of a spill I will follow the procedures outlined by this plan.

Custom Applicator_____Operation Owner_____

Date_____

Operation and Maintenance – Emergency Action Plan

Written Reports

All spills must be reported to management personnel and include the following information.

1. Name of person reporting spill
2. Date and time
3. Location of spill
4. Pumping volume per minute
5. Approximate amount of spill (gals)
6. Application Rate (gals/acre)
7. Application method
8. Manure source
9. Affected landowners
10. How did the spill occur?
11. What action was taken?
12. Recommendations to prevent future spill of this kind.

Landowner Notification

The listed management personnel will notify all affected landowners and file all necessary documents related to the spill.

Name	Home Phone	Cellular Phone	Pager

Animal Outputs – Production, Collection, Transfer, Storage Summary

Location / Animal Type / Number / Size	Production Characteristics	Collection, Transfer, Storage	Estimated Annual Production
Corrals Animal Unit (AU) values AU = no. of animals * weight / 1AU/1,000lbs 860 milkers @ 1,350 lbs. = 1,161 AU 840 heifers @ 1,100 lbs. = 924 AU 120 bulls (sold) @ 816 lbs = 98 AU 21 breeding bulls @ 1,320 = 28 AU	**Corrals** Milk herd spends 22 hours in corrals. Therefore 94% of manure is considered a solid. Solids = 1.31 Ft^3 / 1,000 lb cow Nutrients in manure as excreted[i1] N = 0.45 lb / 1,000 lb / day P_2O_5 = 0.07 lb / 1,000 lb / day K_2O = 0.26 lb / 1,000 lb / day	**Corrals** Scraped at least weekly, applied to fields and incorporated during field preparation. Solids stored in the corrals if necessary. Nitrogen loss during handling = 37%[2]	**Corrals** Annual manure production = 3,599 tons[3]
Milk Barn The milk herd is the source of manure and wastewater production.	**Milk Barn** Enclosed holding area and milk parlor. 6% manure considered liquid due to time spent in parlor (about 2 hours per cow per day). No hydraulic flush. No feeding during milking.	**Milk Barn** Manure & wash water collected in a sump near the milk parlor and pumped to a static side hill screen. The screen separates 30% of Total Solids (TS) therefore 177 tons/year pass over the side hill screen.[4] Manure, wash water, and storm runoff are collected and stored in an anaerobic lagoon prior to utilization. Nitrogen losses include: Storage = 35% Application = 25% Denitrification = 12%	**Milk Barn** Annual wastewater production is 80 acre-feet per year.

[1] From Agricultural Waste Management Field Handbook, Table 4-5, p. 4-8
[2] From Agricultural Waste Management Field Handbook, Table 11-5, p. 11-18
[3] Based on sample plan calculation.
[4] From sample plan calculations.

P. 1

Sample Plan Calculations

Given:

Weight is pounds

	Number	Weight	Location
Milkers	860	1350	Corrals
Bulls	21	1320	Corrals
Heifers	840	1100	Other pens
Bulls-sold	120	816	Other pens sold after 12-14 months

Required:

Liquids from holding pen and milking center will be passed over a side hill screen to separate solids. Liquids from the screen will gravity flow to lagoon. Screened solids will be collected in a bunker below the screen and removed with a tractor. Liquids will be utilized on cropland either through a travelling gun sprinkler or three center pivot sprinklers.

Solids collected on site will be utilized on cropland fields not irrigated with effluent.

Animal Unit values

AU = number of animals * weight * 1 AU/1,000 lb

Milkers	1161	AU
Bulls	28	AU
Heifers	924	AU
Bulls-sold	98	AU

COLLECTION

Solids in corrals dependent upon time spent in corrals

The #/day excreted is based on total solids from Table 4-5 Ag. Waste Mgmt Field Handbook.

Milkers	22	hr	13.5	#/day excreted
Bulls	24	hr	12.5	#/day excreted
Heifers	24	hr	9.14	#/day excreted
Bulls-sold	24	hr	9.5	#/day excreted

V_{solids} = time in corrals * wt of excreted solids/day * number of cows

Conversion from #/day to tons/year

V Milkers	10,643	#/day	1,942	tons/year
V Bulls	263	#/day	48	tons/year
V Heifers	7,678	#/day	1,401	tons/year
V Bulls-s	1,140	#/day	208	tons/year

Solids in milking area

Milkers are in the milk parlor for 2 hours per day

V_{solids} - time in parlor *wt of excreted solids/day * number of cows

V = 968 #/day 177 tons/year

This volume passes over a side hill separator screen.

(87.2)(860)

P. 2

Liquids - Based on ADWR records, water use per cow for washing, milking, and clean up is 87.2 gal/cow/day. The liquids produced per day is 74,992 gallons. Corrals are not hydraulically flushed, liquids evaporate or absorbed in manure on corral floor.

TREATMENT

Solids are stored in corrals. The corrals are scraped in preparation to broadcast on cropland fields.

Total solids stored in corrals **3,599** tons

Solids in milking area is 968 #/day. The side hill screen separates 30% of the Total Solids (TS) or 290 #/day, thus 70% TS or 678 #/day end up in the lagoon.

(290)(365)/2000

Total amount of separated solids in a year **53** tons/year

Total solids from corrals and separator is **3,652** tons/year

STORAGE

Lagoon storage capacity calculation and the storm run off calculation is shown on another page of the sample plan.

The existing lagoon is 910' long x 34' wide, 1:1 slopes
Bottom width is 25'
Depth varies from 12', 18', 14.5', 7'

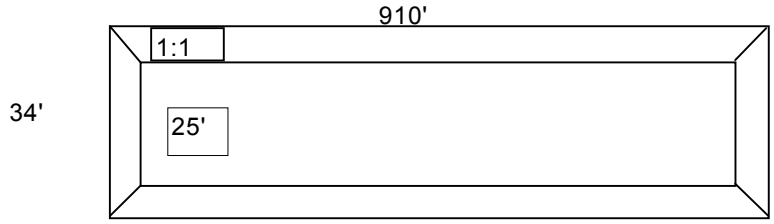

Nutrient value of as excreted manure

N = 0.38#/day/1000# cow
P = 0.06#/day/1000# cow
K = 0.25#/day/1000# cow

Estimated nitrogen losses of **solids** during storage, application, and denitrification

Based on tables in Chapter 11 AWMFH

Storage	35%
Application	25%
Denitrification	10%

Estimated nitrogen losses of **liquids** during storage, application, and denitrification

Based on tables in Chapter 11 AWMFH

Storage	35%
Application	25%
Dentrification	12%

Nutrient value of solids and liquids determined by samples tested in a lab.
Available nutrients in the cropped fields are determined by soil sampling.
Plant tissue analysis conducted during crop growth to monitor plant nitrate levels.

Nutrient Accounting

Animal waste provides much needed organic matter to the soil and nutrients to crops. Dairy wastewater and manure tends to be high in phosphate (P2O5) and potash (K20). Soil analysis, plant petiole analysis, and manure and wastewater analyses are necessary for proper nutrient accounting. Avoid commercial fertilizers unless soil and plant analyses indicate low levels.

Discussions with the farm manager indicate approximately 6.5 tons/acre of manure are applied to fields during field preparation. This may not occur for each field between annual crops. Currently 250 pounds of commercial fertilizer (11-52-0) and 50 pounds of urea (46% nitrogen) are applied. Nutrient content of the fertilizer is 50.5 pounds of nitrogen (27.5 pounds from the 11-52-0 and 23 pounds from the urea) and 130 pounds of phosphate (from the 11-52-0).

Soil laboratory analysis indicated the presence of 150 pounds of available nitrate nitrogen, 143 pounds bicarbonate phosphoric oxide, and 2,771 pounds of potash. Nutrient budgets were completed for each crop to determine deficiencies or excess nutrients. The nutrient budgets indicate excess nutrients as a negative number, especially for phosphate and potash.

Due to existing high levels of phosphate and potash is field samples, additional commercial fertilizers containing these nutrients are not needed. Plants take up phosphorus in the orthophosphate form. Although the total amount of phosphorus in the soil is high, the quantity of plant-available phosphorus in the soil solution is small, ranging from 0.256 to 3.00 pounds per acre. A dynamic equilibrium exists in the soil between the absorbed phosphorus of mineral and organic components and the soil solution. Plants require approximately 0.5 to 1.0 pounds of phosphorus per acre per day.

Continuous application of manure (annually or every other year) results in a bioavailable source of phosphorus. Elevated soil test levels of phosphorus indicate an increased risk of phosphorus transport off the soil surface in storm runoff and erosion.

Petiole sampling will reflect actual plant nitrogen levels and indicate if additional N-inputs are necessary. Petiole sampling will occur throughout the growing season. If historical soil sampling data is limited, then an annual soil-sampling program is needed to establish baseline information. Once baseline soils data set is established then soil samples can be collected every 3-5 years. It may be necessary to sample lagoon wastewater annually due to continuous inflow.

PHOSPHORUS INDEX WORKSHEET for Arizona

Client Name:	Le Grand Merd Dairy	Field(s):	All	Date:	12/1/01
Planner:	Sample	Location:	Arizona	Crop:	Oats
Soil Permeablity (in/hr):	0.3	Slope (%):	0.05	Planned/Exist.:	Existing

Site Characteristic	Place an X in the appropriate box for each of the Site Characteristic listed below.					Sub Total
Soil Test P Level	Very Low <8 ppm	Low 8-15 ppm	Moderate 15-23 ppm	High 23-30 ppm	Very High >30 ppm	
					x	8
Phosphorus (P_2O_5) Application Rate	None Applied	1-30 lbs/ac P_2O_5	30-90 lbs/ac P_2O_5	90-150 lbs/ac P_2O_5	>150 lbs/ac P_2O_5	
				x		4
Organic Phosphorus Source Application Method	None Applied	Injected Deeper than 2 inches	Incorporated Immediately before Planting	Incorp. >3 Mo. Before Planting **or** Surface Applied <3 Mo. before Planting	Surface Applied >3 Months Before Planting	
			x			2
Phosphorus Fertilizer Application Method	None Applied	Placed with Planter Deeper than 2 in.	Incorporated Immediately before Planting	Incorp. >3 Mo. Before Planting **or** Surface Applied <3 Mo. before Planting	Surface Applied >3 Months Before Planting	
		x				1
Proximity of Nearest Field Edge to Named Stream or Lake	Very Low >1000 feet	Low 500-1000 feet	Medium 200-500 feet	High 30-200 feet	Very High <30 feet	
	x					0
Soil Erosion (wind & water)	Very Low <1 t/ac	Low 1-3 t/ac	Medium 3-5 t/ac	High 5-15 t/ac	Very High >15 t/ac	
		x				1.5
Runoff Class (Runoff Class Table 2)	Very Low or Negligible	Low	Medium	High	Very High	
		x				1.5
Irrigation Erosion (See QS note)	Not Irrigated or No Furrow Irrigation	Tailwater Recovery **or** QS<6 for very erodible soils **or** QS<10 for resistant soils	QS>10 for erosion resistant soils	QS>10 for erodible soils	QS>6 for very erodible soils	
	x					0
Grazing Management	Not Grazed	Graze Crop Residues	Pasture <30% Dry Matter as Supplemental Feed	Pasture 30 to 80% Dry Matter as Supplemental Feed	Pasture 80 to 100% Dry Matter as Supplemental Feed	
	x					0
Vegetative Buffer	> 100 ft wide	65-100 feet wide	20-65 feet wide	< 20 feet wide	No Buffer	
					x	12

P Hazard Class:	Medium	Total Index Points:	30.0
Phosphorus Application Classification:		N Based	

Notes:

This evaluation has a Medium P hazard class and the nutrient application can be based on N.

Comments: Field is sprinkler irrigated, currently applying additional phosphorous (inorganic).

PHOSPHORUS INDEX WORKSHEET for Arizona

Client Name:	**Le Grand Merd Dairy**	**Field(s):**	**All**	**Date:**	**12/3/01**
Planner:	**Sample**	**Location:**	**Arizona**	**Crop:**	**Oats**
Soil Permeablity (in/hr):	**0.3**	**Slope (%):**	**0.05**	**Planned/Exist.:**	**Planned**

Site Characteristic	**Place an X in the approprate box for each of the Site Characteristic listed below.**					**Sub Total**
Soil Test P Level	Very Low <8 ppm	Low 8-15 ppm	Moderate 15-23 ppm	High 23-30 ppm	Very High >30 ppm	
					x	8
Phosphorus (P_2O_5) Application Rate	None Applied	1-30 lbs/ac P_2O_5	30-90 lbs/ac P_2O_5	90-150 lbs/ac P_2O_5	>150 lbs/ac P_2O_5	
				x		4
Organic Phosphorus Source Application Method	None Applied	Injected Deeper than 2 inches	Incorporated Immediately before Planting	Incorp. >3 Mo. Before Planting **or** Surface Applied <3 Mo. before Planting	Surface Applied >3 Months Before Planting	
		x				1
Phosphorus Fertilizer Application Method	None Applied	Placed with Planter Deeper than 2 in.	Incorporated Immediately before Planting	Incorp. >3 Mo. Before Planting **or** Surface Applied <3 Mo. before Planting	Surface Applied >3 Months Before Planting	
	x					0
Proximity of Nearest Field Edge to Named Stream or Lake	Very Low >1000 feet	Low 500-1000 feet	Medium 200-500 feet	High 30-200 feet	Very High <30 feet	
	x					0
Soil Erosion (wind & water)	Very Low <1 t/ac	Low 1-3 t/ac	Medium 3-5 t/ac	High 5-15 t/ac	Very High >15 t/ac	
	x					0
Runoff Class (Runoff Class Table 2)	Very Low or Negligible	Low	Medium	High	Very High	
		x				1.5
Irrigation Erosion (See QS note)	Not Irrigated or No Furrow Irrigation	Tailwater Recovery **or** QS<6 for very erodible soils **or** QS<10 for resistant soils	QS>10 for erosion resistant soils	QS>10 for erodible soils	QS>6 for very erodible soils	
	x					0
Grazing Management	Not Grazed	Graze Crop Residues	Pasture <30% Dry Matter as Supplemental Feed	Pasture 30 to 80% Dry Matter as Supplemental Feed	Pasture 80 to 100% Dry Matter as Supplemental Feed	
	x					0
Vegetative Buffer	> 100 ft wide	65-100 feet wide	20-65 feet wide	< 20 feet wide	No Buffer	
					x	12

P Hazard Class: **Medium** **Total Index Points:** **26.5**

Phosphorus Application Classification: **N Based**

Notes:

This evaluation has a Medium P hazard class and the nutrient application can be based on N.

Comments: Sprinkler irrigated, erosion controlled, no inorganic phosphorous, manure injected

Nutrient Budget Based on Nutrients Removed by Crops

A. Planned crop or crop rotation Alfalfa Haylage **Client** Le Grande Merd Dairy

B. Yield expectation (goal) 9 tons **Fields**

C. Nutrients removed by crop

C1. Yield (units of measure) * Unit weight (lb) = pounds crop material harvested

9	2000	18000	**lbs**

C2. Nutrient content of harvested material (refer to table 6-6)

% N	% P	% K
5.58	0.66	4.64

C3. Crop nutrient content

N = [(C1) (C2 %N)]	P = [(C1) (C2 %P)]	K = [(C1) (C2 %K)]
1,004.40 **lbs N**	118.80 **lbs P**	835.20 **lbs K**

C4. Convert to fertilizer equivalent units

C4 N = C3 N	C4 P = C3 P * 2.29	C4 K = C3 K * 1.21
1,004.40 **lbs N**	272.05 **lbs P_2O_5**	1010.59 **lbs K_2O**

D. Nitrogen credits

D1. Legume credits from previous crop	155	lb/acre
D2. Residual from previous manure applications	0	lb/acre
D3. Irrigation water nitrate nitrogen	0	lb/acre
D4. Others (atmospheric deposition, mulch)	0	lb/acre
D5. Total N credits (D1 + D2 + D3 + D4)	155	lb/acre

E. Sources of nutrients available to the field	**N**	**P_2O_5**	**K**
E1. Manure and organic material applied		143.3	2771
E2. Nitrogen credits (D5)	155		
E3. Starter fertilizer			
E4. Others (Thiosol 10gal/ac)	19.4		
E5. Total nutrient sources	174.4	143.3	2771

F. Show nutrient balance	**N**	**P_2O_5**	**K**
F1. Nutrients removed by crop (C4)	1,004.40	272.05	1010.59
F2. Total nutrient sources (E5)	174.4	143.3	2771
F3. Nutrient balance (F1 - F2)	830.00	128.75	-1760.41

If F3 is a positive number, then additional nutrients are required. Supply crop with fertilizers or other nutrient forms
If F3 is a negative number, then nutrients are in excess. Reallocate the sources of available nutrients.

Nutrient Budget Based on Nutrients Removed by Crops

A. Planned crop or crop rotation Barley Silage **Client** Le Grande Merd Dairy

B. Yield expectation (goal) 4.6 tons (dry wt) **Fields**

C. Nutrients removed by crop

C1. Yield (units of measure) * Unit weight (lb) = pounds crop material harvested

4.6	2000	9200	**lbs**

C2. Nutrient content of harvested material (refer to table 6-6)

% N	% P	% K
1.6	0.28	0.94

C3. Crop nutrient content

N = [(C1) (C2 %N)]	P = [(C1) (C2 %P)]	K = [(C1) (C2 %K)]
147.20 **lbs N**	25.76 **lbs P**	86.48 **lbs K**

C4. Convert to fertilizer equivalent units

C4 N = C3 N	C4 P = C3 P * 2.29	C4 K = C3 K * 1.21
147.20 **lbs N**	58.99 **lbs P_2O_5**	104.64 **lbs K_2O**

D. Nitrogen credits

D1. Legume credits from previous crop	155	lb/acre
D2. Residual from previous manure applications	0	lb/acre
D3. Irrigation water nitrate nitrogen	0	lb/acre
D4. Others (atmospheric deposition, mulch)	0	lb/acre
D5. Total N credits (D1 + D2 + D3 + D4)	155	lb/acre

E. Sources of nutrients available to the field	**N**	**P_2O_5**	**K**
E1. Manure and organic material applied		143.3	2771
E2. Nitrogen credits (D5)	155		
E3. Starter fertilizer (20gal/ac 10-34-0)	22	74.8	
E4. Others ()	0		
E5. Total nutrient sources	177	218.1	2771

F. Show nutrient balance	**N**	**P_2O_5**	**K**
F1. Nutrients removed by crop (C4)	147.20	58.99	104.64
F2. Total nutrient sources (E5)	177	218.1	2771
F3. Nutrient balance (F1 - F2)	-29.80	-159.11	-2666.36

If F3 is a positive number, then additional nutrients are required. Supply crop with fertilizers or other nutrient forms
If F3 is a negative number, then nutrients are in excess. Reallocate the sources of available nutrients.

USDA-NRCS
May-01

Field Office
Arizona

Nutrient Budget Based on Nutrients Removed by Crops

A. Planned crop or crop rotation Corn Silage **Client** Le Grande Merd Dairy

B. Yield expectation (goal) 6.2 tons (dry wt) **Fields**

C. Nutrients removed by crop

C1. Yield (units of measure) * Unit weight (lb) = pounds crop material harvested

6.2	2000	12400	**lbs**

\

C2. Nutrient content of harvested material (refer to table 6-6)

% N	% P	% K
1.1	0.25	1.09

C3. Crop nutrient content

N = [(C1) (C2 %N)]	P = [(C1) (C2 %P)]	K = [(C1) (C2 %K)]
136.40 **lbs N**	31.00 **lbs P**	135.16 **lbs K**

C4. Convert to fertilizer equivalent units

C4 N = C3 N	C4 P = C3 P * 2.29	C4 K = C3 K * 1.21
136.40 **lbs N**	70.99 **lbs P_2O_5**	163.54 **lbs K_2O**

D. Nitrogen credits

D1. Legume credits from previous crop	150	lb/acre
D2. Residual from previous manure applications	0	lb/acre
D3. Irrigation water nitrate nitrogen	0	lb/acre
D4. Others (atmospheric deposition, mulch)	0	lb/acre
D5. Total N credits (D1 + D2 + D3 + D4)	150	lb/acre

E. Sources of nutrients available to the field	**N**	**P_2O_5**	**K**
E1. Manure and organic material applied	27	97.5	234
E2. Nitrogen credits (D5)	150		
E3. Starter fertilizer (250# 11-52-0)	27.5	130	
E4. Others (50# urea)	23	143.3	2771
E5. Total nutrient sources	227.5	370.8	3005

F. Show nutrient balance	**N**	**P_2O_5**	**K**
F1. Nutrients removed by crop (C4)	136.40	70.99	163.54
F2. Total nutrient sources (E5)	227.5	370.8	3005
F3. Nutrient balance (F1 - F2)	-91.10	-299.81	-2841.46

If F3 is a positive number, then additional nutrients are required. Supply crop with fertilizers or other nutrient forms
If F3 is a negative number, then nutrients are in excess. Reallocate the sources of available nutrients.

USDA-NRCS
May-01

Field Office
Arizona

Nutrient Budget Based on Nutrients Removed by Crops

A. Planned crop or crop rotation Oat Silage **Client** Le Grande Merd Dairy

B. Yield expectation (goal) 4.5 tons (dry wt) **Fields**

C. Nutrients removed by crop

C1. Yield (units of measure) * Unit weight (lb) = pounds crop material harvested

4.5	2000	9000	**lbs**

C2. Nutrient content of harvested material (refer to table 6-6)

% N	% P	% K
1.8	0.32	1.06

C3. Crop nutrient content

N = [(C1) (C2 %N)]		P = [(C1) (C2 %P)]		K = [(C1) (C2 %K)]	
162.00	**lbs N**	28.80	**lbs P**	95.40	**lbs K**

C4. Convert to fertilizer equivalent units

C4 N = C3 N		C4 P = C3 P * 2.29		C4 K = C3 K * 1.21	
162.00	**lbs N**	65.95	**lbs P_2O_5**	115.43	**lbs K_2O**

D. Nitrogen credits

D1.	Legume credits from previous crop	155	lb/acre
D2.	Residual from previous manure applications	0	lb/acre
D3.	Irrigation water nitrate nitrogen	0	lb/acre
D4.	Others (atmospheric deposition, mulch)	0	lb/acre
D5.	Total N credits (D1 + D2 + D3 + D4)	155	lb/acre

E. Sources of nutrients available to the field	**N**	**P_2O_5**	**K**
E1. Manure and organic material applied	0	143.3	2771
E2. Nitrogen credits (D5)	155		
E3. Starter fertilizer ()	0	0	0
E4. Others (2@10gal/ac 10-34-0)	22	74.8	0
E5. Total nutrient sources	177	218.1	2771

F. Show nutrient balance	**N**	**P_2O_5**	**K**
F1. Nutrients removed by crop (C4)	162.00	65.95	115.43
F2. Total nutrient sources (E5)	177	218.1	2771
F3. Nutrient balance (F1 - F2)	-15.00	-152.15	-2655.57

If F3 is a positive number, then additional nutrients are required. Supply crop with fertilizers or other nutrient forms
If F3 is a negative number, then nutrients are in excess. Reallocate the sources of available nutrients.

Nutrient Budget Based on Nutrients Removed by Crops

A. Planned crop or crop rotation Sorghum-Sudan **Client** Le Grande Merd Dairy

B. Yield expectation (goal) 4 tons (dry wt) **Fields**

C. Nutrients removed by crop

C1. Yield (units of measure) * Unit weight (lb) = pounds crop material harvested

4	2000	8000	**lbs**

C2. Nutrient content of harvested material (refer to table 6-6)

% N	% P	% K
1.7	0.2	1.81

C3. Crop nutrient content

N = [(C1) (C2 %N)]	P = [(C1) (C2 %P)]	K = [(C1) (C2 %K)]
136.00 **lbs N**	16.00 **lbs P**	144.80 **lbs K**

C4. Convert to fertilizer equivalent units

C4 N = C3 N	C4 P = C3 P * 2.29	C4 K = C3 K * 1.21
136.00 **lbs N**	36.64 **lbs P_2O_5**	175.21 **lbs K_2O**

D. Nitrogen credits

D1. Legume credits from previous crop	155	lb/acre
D2. Residual from previous manure applications	0	lb/acre
D3. Irrigation water nitrate nitrogen	0	lb/acre
D4. Others (atmospheric deposition, mulch)	0	lb/acre
D5. Total N credits (D1 + D2 + D3 + D4)	155	lb/acre

E. Sources of nutrients available to the field	**N**	**P_2O_5**	**K**
E1. Manure and organic material applied		143.3	2771
E2. Nitrogen credits (D5)	155		
E3. Starter fertilizer (20gal/ac 10-34-0)	22	74.8	
E4. Others ()	0		
E5. Total nutrient sources	177	218.1	2771

F. Show nutrient balance	**N**	**P_2O_5**	**K**
F1. Nutrients removed by crop (C4)	136.00	36.64	175.21
F2. Total nutrient sources (E5)	177	218.1	2771
F3. Nutrient balance (F1 - F2)	-41.00	-181.46	-2595.79

If F3 is a positive number, then additional nutrients are required. Supply crop with fertilizers or other nutrient forms
If F3 is a negative number, then nutrients are in excess. Reallocate the sources of available nutrients.

Table 6-6 Plant nutrient uptake by specified crop and removed in the harvested part of the crop (Kilmer 1982; Morrison 1956; Sanchez 1976; USDA 1985) Note: Crops identified typical for Arizona however yields may need to be adjusted.

Crop	Dry wt. lb/bu	Typcial yield/acre plant part	N	P	K	Ca	Mg	S	Cu	Mn	Zn
			********** Average concentration of nutrients (%) **********								
Grain Crops			********** % of the harvested material **********								
Barley	48	50 bu	1.82	0.34	0.43	0.05	0.10	0.16	0.0016	0.0016	0.0031
		1 T. straw	0.75	0.11	1.25	0.40	0.10	0.20	0.0005	0.016	0.0025
Corn	56	120 bu	1.61	0.28	0.40	0.02	0.10	0.12	0.0007	0.0011	0.0018
		4.5 stover	1.11	0.2	1.34	0.29	0.22	0.16	0.0005	0.0166	0.0033
Oats	32	80 bu	1.95	0.34	0.49	0.08	0.12	0.2	0.0012	0.0047	0.002
		2 T. straw	0.63	0.16	1.66	0.20	0.20	0.23	0.0008	0.003	0.0072
Sorghum	56	60 bu	1.67	0.36	0.42	0.13	0.17	0.17	0.0003	0.0013	0.0013
		3 T. straw	1.08	0.15	1.31	0.48	0.30	0.13		0.116	
Wheat	60	40 bu	2.08	0.62	0.52	0.04	0.25	0.13	0.0013	0.0038	0.0058
		1.5 T straw	0.67	0.07	0.97	0.20	0.10	0.17	0.0003	0.0053	0.0017
Oil Crops			********** % of the harvested material **********								
Rapeseed	50	35 bu	3.60	0.79	0.76		0.66				
		3 T. straw	4.48	0.43	3.37	1.47	0.06	0.68	0.0001	0.0008	
Sunflower	25	1,110 lb	3.57	1.71	1.11	0.18	0.34	0.17		0.0022	
		4 T. stover	1.5	0.18	2.92	1.73	0.09	0.04		0.0241	
Fiber Crops			********** % of the harvested material **********								
Cotton		600 lb. Lint &									
		1,000 lb seeds	2.67	0.58	0.83	0.13	0.27	0.20	0.0040	0.0073	0.0213
		burs & stalks	1.75	0.22	1.45	1.40	0.40	0.75			
Forage Crops			********** % of the harvested material **********								
Alfalfa		4 tons	2.25	0.22	1.87	1.40	0.26	0.24	0.0008	0.0055	0.0053
Bermudagrass		8 tons	1.88	0.19	1.40	0.37	0.15	0.22	0.0013		
Ryegrass		5 tons	1.67	0.27	1.42	0.65	0.35				
Tall fescue		3.5 tons	1.97	0.20	2.00	0.30	0.19				
Timothy		2.5 tons	1.20	0.22	1.58	0.36	0.12	0.10	0.0006	0.0062	
Wheatgrass		1 ton	1.42	0.27	2.68	0.36	0.24	0.11			
Silage Crops			********** % of the harvested material **********								
Alfalfa Haylage (50% dm)		10 wet/5 dry	2.79	0.33	2.32	0.97	0.33	0.36	0.0009	0.0052	
Corn silage (35% dm)		20 wet/7 dry	1.10	0.25	1.09	0.36	0.18	0.15	0.0005	0.0070	
Forage sorghum (30% dm)		20 wet/6 dry	1.44	0.19	1.02	0.37	0.31	0.11	0.0032	0.0045	
Oat haylage (40% dm)		10 wet/4 dry	1.60	0.28	0.94	0.31	0.24	0.18			
Sorghum-Sudan (50% dm)		10 wet/5 dry	1.36	0.16	1.45	0.43	0.34	0.04		0.0091	
Turf grass			********** % of the harvested material **********								
Bermudagrass		4 tons	1.88	0.19	1.40	0.37	0.15	0.22	0.0013		

Record Keeping - Animal Outputs

Type and Number of Animals	**Date**	**Date**	**Date**	**Date**	**Date**	**Date**
1.						
2.						
3.						
4.						
Type of Inspections Completed	**Date**	**Date**	**Date**	**Date**	**Date**	**Date**
1.						
2.						
3.						
Type of Repairs Completed	**Date**	**Date**	**Date**	**Date**	**Date**	**Date**
1.						
2.						
3.						

Type Manure or Waste Removed	**Date**	**Amt.**	**Date**	**Amt.**	**Date**	**Amt.**	**Date**	**Amt.**	**Date**	**Amt.**	**Date**	**Amt.**
1												
2.												
3.												

Type of Manure Transported Off the Farm	**Where**	**Date**	**Amount**	**Where**	**Date**	**Amount**	**Where**	**Date**	**Amount**
1									
2.									
3.									
4.									

Comments / Notes:

Nutrient Application Summary Table

Field(s)	Year	Application Rate Tons/Ac Or 1000 Gal/Ac	Method of Application					Setback Distances				
			Surface No Incorp.	Surface Incorp. W/I 24 Hr.	Surface Incorp. W/I 1 Week	Surface Incorp. > I Week	Injection	Well Surface Applied 300 Ft.	Well - Surface Applied Incorp. W/I 24 Hours 100 Ft.	Well Direct Inject. 50 Ft.	Pond, Lake, Drainage-way, or Waterway 33 Ft.	Direct Inject. No Setback
3422 - All	2000	3 tons/ac			X			NA	NA	NA	NA	NA
3424 - All	2001	3 tons/ac			X						X	
3421 - All	2002	3 tons/ac			X						X	

<u>Fertilizer and Manure Application Record</u>

Name:_____

Field	Date	Manure or Fertilizer Type	Ground Cover	% Soil Moisture.	Rate of Application				Weather
					Rate Vol/Wt	N Lbs/Ac	P2O5 Lbs/Ac	K20 Lbs/Ac	

Comments /Notes:

Crops Record Keeping (Year)

Field	Crop	Date Planted	Variety	Date Harvested	Yield	Comments

Section 6C
Soil Testing Procedures

Soil Testing Procedures

A properly taken soil sample is important in determining nutrient levels and other characteristics of the soil. Soil samples for soil tests should not represent more than 40 acres. A composite soil sample should be taken from each field that consists of 15-20 sub-samples taken from random and representative areas. These representative areas should have similar management and soils. Soil sampling depth for N, P and K samples shall be 6 - 9 inches (normal plow layer). Under no-till conditions, soils can be sampled using the top 4 inches only.

Soil samples shall be collected and prepared according to The University of Arizona guidance or standard industry practice. A list of testing laboratories using approved procedures can be found at the University of Arizona website (or see appendix section for a list printed from that website):

http://www.ag.arizona.edu/pubs/garden/az1111

Avoid taking soil test sample within 9 months of a manure application.

Soil testing shall include analysis for any nutrients for which specific information is needed to develop the nutrient plan. Request analyses pertinent to monitoring or amending the annual nutrient budget, e.g. pH, electrical conductivity (EC), soil organic matter, nitrogen, phosphorus, and potassium. Additional useful information would be cation exchange capacity (CEC), sodium, calcium and magnesium, and micronutrients. The minimum parameters tested for in Arizona will include: pH, electrical conductivity (EC), nitrate nitrogen, phosphorus, and potassium. Often, testing labs will have different standard or basic tests that include these parameters.

Application Equipment Calibration

Commercial Fertilizer Application Equipment Calibration
The nitrogen applicator, commercial broadcast spreaders, and corn planter should be set according to the manufacturer's recommendations, filled with a known amount of manure, and checked over a known acreage by applying the manure. Adjustments will be made to achieve the planned rates.

Manure Spreader Calibration
There are several methods that can be used to calibrate the application rate of a manure spreader. The two best methods are the load-area method and the plastic sheet method. It is recommended to repeat the calibration procedure 2 to 3 times and average the results to establish a more accurate calibration.

Before calibrating a manure spreader, the spreader settings, such as splash plates, should be adjusted so that the spread is uniform. Most spreaders tend to deposit more manure near the spreader than at the edge of the spread pattern. Overlapping can make the overall application more uniform. Calibrating application rates when overlapping requires measuring the width of two spreads and dividing by two to get the effective spread width.

Calibration should take place annually or whenever the manure source or consistency changes.

Manure Spreader - Load-Area Method
The load-area method is the most accurate and can be used for most types of manure handling. This method consists of determining the amount (volume or weight) of manure in a spreader and the total area over which it is applied. Determine the amount of manure in a spreader by weighing the spreader when it is full of manure and again when it is empty. The difference is the quantity of manure applied over the area covered. Spreader capacities listed by the manufacturers can be used to determine the amount of manure in the spreader. However, care must be taken when using manufacturer's spreader capacities. Heaped loads, loading methods, and manure type may vary considerably from that listed by the manufacturers. Spreader capacities for liquid tankers are accurate provided the tanker is filled to the manufacturer's recommended levels, and no foam is present in the tank.

The area of spread is determined by measuring the length and width of the spread pattern. Measuring can be done with a measuring wheel, measuring tape, or by pacing.

The application rate (tons or gallons/acre) is calculated by dividing the amount of manure in the spreader (tons or gallons) by the area it is spread over (square feet) multiply by 43,560 square feet/acre.

$$\text{Rate} = \frac{\text{Spreader Capacity}}{\text{Distance traveled X Spreading width}} \text{ X } 43{,}560$$

Manure Spreader - Plastic Sheet Method
The plastic sheet method can only be used with solid or semi-solid manure. This method of calibrating spreader application rates involves:

1) cutting a plastic sheet to the specified dimensions (56 inches X 56 inches),
2) weighing the clean plastic sheet,

3) laying out the plastic sheet on the ground and driving the manure spreader (applying manure at a recorded speed and spreader setting) over the sheet,
4) weighing the plastic sheet with the manure on it,
5) determining the net weight of the manure on the sheet (weight of manure and sheet - weight of the clean sheet), and
6) the net pounds of manure equal tons per acre applied.

When calibrating manure spreaders, all details regarding tractor speed and manure spreader settings and date(s) of each calibration should be recorded with manure application information, and directly marked on the equipment. Mark equipment to ensure a known application rate is applied each time the referenced tractor speed and spreader settings are used. Manure spreader settings can include such things as: fast and slow settings on some box spreaders, gate position on side delivery spreaders, and splash plate position and fill levels on liquid tankers.

Sprinkler Irrigation System Calibration
Place 3-5 buckets throughout the irrigation spray pattern and collect samples while operating the pump at a given revolution per minute and pressure (for a traveling gun, record the ground speed also). At the end of the planned sample period, measure the amount of liquid collected in inches and average the samples. The following chart shows how many gallons per acre applied per inch applied.

Gallons applied per inch of liquid manure applied.

Inches Liquid Manure Applied via Irrigation	Gallons per Acre
0.20	5,430
0.30	8,146
0.40	10,860
0.50	13,577
0.75	20,365
1.00	27,154
1.25	33,942
1.50	40,731

Soft Hose Injection System with Irrigation Hose:
Alternative 1. Use a flow meter mounted on the injector system, measure the distance and the width and calculate the amount applied over a measured area. Example: the flow meter measured 1,000 gallons over a distance of 600 feet and 10 feet wide.

$$\frac{\text{Gallons Applied (1,000 gal)}}{\text{Gallons/Acre Distance traveled (600 ft) X Application width (10 ft)}} \text{ X } 43{,}560 \text{ sq. ft/acre}$$

= Application Rate (gallons/acre) = (7,260 gallons/acre)

Alternative 2. (Requires a 10-20 gallon graduated measuring container)

Step 1) In the field, measure the flow out of one injector for 5 seconds into the graduated measuring container and record gallons, repeat three (3) times and average the results.
Step 2) Multiply the average amount collected from one injector by the number of injectors (equals amount applied for the whole system for 5 seconds).

Step 3) Multiply the results of Step 2 times 12 to get gallons per minute.
Step 4) Place the injector in the soil at the planned depth and operating speed and record the distance traveled in 1 minute (average 3 different measurements).
Step 5) Determine the effective application width (number of injectors X injector spacing in feet).
Step 6) Multiply the effective width times the distance traveled in 1 minute (this gives the square feet covered in 1 minute).
Step 7) Divide the result of Step 6 by 43,560 (this gives the acres covered in 1 minute).
Step 8) Divide the results of Step 3 (gallons per minute) by the results of Step 7 (acres covered in 1 minute) - (this gives the gallons applied per acre.

Example:

Step 1) Collected an average of 6 gallons from one injector for 5 seconds.

Step 2) Applicator has 8 injectors (8 injectors X 6 gallons per injector = 48 gallons for 5 seconds)

Step 3) 48 gallons in 5 seconds X 12 = 576 gallons/minute applied

Step 4) Average distance covered in 1 minute was 250 feet.

Step 5) Average width of the applicator is 12 feet.

Step 6) 12 feet wide X 250 feet long = 3,000 square feet

Step 7) 3,000 square feet divided by 43,560 square feet/acre = 0.07 acres covered in 1 minute

Step 8) 576 gallons/minute divided by 0.07 acres/minute = 8,229 gallons/acre

APPENDIX

NRCS State Standard, 590 - Nutrient Management

Phosphorus Assessment Tool Technical Note

Dairy Inventory Worksheet

Runoff Calculations

Soil Investigations (Geology)

Lagoon Capacity Calculations

Operation and Maintenance Plans

Surveying Map

Evaporation Calculations

Engineering Drawings

Environmental Evaluation

List of Testing Laboratories

References

NATURAL RESOURCES CONSERVATION SERVICE
ARIZONA CONSERVATION PRACTICE STANDARD

NUTRIENT MANAGEMENT
(Acre)

CODE 590

DEFINITION

Managing the amount, source, placement, form, and timing of the application of nutrients and soil amendments.

PURPOSES

- To budget and supply nutrients for optimum plant production.
- To properly utilize manure or organic by-products as a plant nutrient source.
- To minimize agricultural nonpoint source contamination of surface and ground water resources.
- To maintain or improve the physical, chemical and biological condition of soil.

CONDITIONS WHERE PRACTICE APPLIES

This practice applies to all lands where plant nutrients and soil amendments are applied.

CRITERIA

General Criteria Applicable to All Purposes

Nutrient management plans shall be prepared in accordance with this standard and comply with all applicable Federal, state, and local laws and regulations.

Arizona law (Title 49-The Environment) contains provisions for the regulation of both the application and management of nitrogen sources in agricultural production.

To comply with the State of Arizona Rule R18-9-202 regarding the application of nitrogen fertilizer the following goal oriented Best Management Practices (BMP) are to be used:

- Application of nitrogen fertilizer shall be limited to that amount necessary to meet projected crop plant needs.
- Application of nitrogen fertilizer shall be timed to coincide as closely as feasible to the periods of maximum crop plant uptake.

The US Department of Agriculture (USDA) prohibits discrimination in all its programs and activities on the basis of race, color, national origin, sex, religion age, disability, political beliefs, sexual orientation, or marital or family status. (Not all prohibited bases apply to all programs.) Persons with disabilities who require alternative means for communication of program information (Braille, large print, audio tape, etc.) should contact USDA's TARGET Center at 202-720-2600 (voice and TDD). To file a complaint of discrimination, write USDA, Director, Office of Civil Rights, Room 326-W, Whitten Building, 1400 Independence Avenue, SW, Washington, DC 20250-9410 or call 202-720-5964 (voice and TDD). USDA is an equal opportunity provider and employer.

Conservation practices are reviewed periodically and updated, if needed. To obtain the current version of this standard, contact the Natural Resources Conservation Service.

- Nitrogen fertilizer shall be applied by a method designed to deliver nitrogen to the area of maximum crop plant uptake.

- Application of irrigation water shall be timed to meet crop plant needs and be managed to minimize loss by leaching and runoff.

- The application of irrigation water shall be timed to minimize losses by leaching and runoff.

- The operator shall use tillage practices that maximize water and nitrogen uptake by crop plants.

Plus:

- Other methods to minimize nitrogen losses from leaching, runoff, or backflow into irrigation wells must be specified.

A complete description of these BMPs with their guidance practices can be found in "Nitrogen Fertilizer Management in Arizona" (Doerge, 1991).

A qualified person, as defined in the General Manual, shall review and/or approve all nutrient management plans. Those qualified (certified) to develop nutrient management plans are conservation planners with USDA-NRCS, agronomists certified by the American Society of Agronomy (ASA), Certified Crop Advisors certified by the ASA through its Certified Crop Advisor (CCA) program, or planners certified by the State of Arizona Nutrient Management Planning Certification Program.

Nutrient management plans that are elements of a more comprehensive conservation plan shall include all requirements of the conservation plan.

A nutrient balance table for nitrogen, phosphorus, and potassium shall be developed that considers all potential sources of nutrients including, but not limited to, animal manure and organic by-products, waste water, sewage sludge, commercial fertilizer, soil, crop residues, legume credits, and irrigation water.

Realistic yield goals shall be established based on soil productivity information, historical yield data, climatic conditions, level of management and/or local research on similar soil, cropping systems, and soil and manure/organic by-products tests. A realistic yield goal is the crop yield that the producer expects to achieve 50% of the time. For new crops or varieties, industry yield recommendations may be used until sufficient yield information is available.

Nutrient management plans (NMP) shall specify the form, source, amount, timing, and method of application of nutrients on each field to achieve realistic production goals, while minimizing nitrogen and/or phosphorus movement to surface and/or ground waters.

Fields having similar soil test results and crop recommendations may be grouped.

Erosion, runoff, and water management controls shall be installed, as needed, on fields that receive nutrients.

Soil Sampling and Laboratory Analysis (Testing)

Nutrient planning shall be based on current soil test results. Current soil tests shall not be older than five years. Annually cropped fields will have a soil test taken the first year of a new plan or rotation, thereafter once in 5 years as a minimum. Hayland and pasture

can be tested once in five years. If organic sources of fertilizers are used two or more consecutive years, annual soil testing is required.

Soil samples shall be collected, prepared, and tested according to the University of Arizona guidance or standard industry practice recognized by the University of Arizona. A partial list of testing laboratories using approved procedures can be found at the University of Arizona website (http://www.ag.arizona.edu/pubs/garden/az1111).

Soil testing shall include analysis for any nutrients for which specific information is needed to develop the nutrient management plan. Request analyses pertinent to monitoring or amending the annual nutrient budget: i.e., nitrogen, phosphorus, and potassium; additional useful information would be: pH, cation exchange capacity (CEC), electrical conductivity (EC), and soil organic matter.

Plant Tissue Testing

Tissue sampling and testing shall be done in accordance with University of Arizona standards or recommendations.

Nutrient Application Rates

Soil amendments used to adjust soil pH or other soil conditions, should be applied for optimum availability and utilization of nutrients.

Nutrient application rates shall be based on University of Arizona recommendations or accepted industry practice. Current soil test results, management capabilities, and realistic yield goals shall be considered. If the University of Arizona recommended rates are not available, application rates shall be based on realistic yield goals and associated plant nutrient uptake rates.

The planned rates of nutrient application, as documented in the nutrient budget, shall be determined based on the following guidance:

- *Nitrogen Application* – Planned nitrogen application rates shall meet the recommended rates, except when manure or other organic by-products are a source of nutrients. When manure or other organic by-products are a source of nutrients, see “Additional Criteria” below.

- *Phosphorus Application* - Planned phosphorus application rates shall meet the recommended rates, except when manure or other organic by-products are a source of nutrients. When manure or other organic by-products are a source of nutrients, see “Additional Criteria” below.

- *Potassium Application* – Excess potassium shall not be applied to the extent that growth and quality in crops or forages are adversely affected. University of Arizona recommendations shall be followed.

- *Other Plant Nutrients* – The planned rates of application of other plant nutrients shall be consistent with University of Arizona guidance or industry practice recognized by the University of Arizona.

- *Starter Fertilizers* – Starter fertilizers containing nitrogen, phosphorus and potassium may be applied in accordance with University of Arizona recommendations or industry practice

recognized by the University of Arizona. When starter fertilizers are used, they shall be included in the nutrient budget.

Nutrient Application Timing and Methods

Timing and method of nutrient application shall consider plant nutrient uptake characteristics, cropping system limitations, weather and climatic conditions, irrigation system, and field accessibility. Also, in addition to application of nutrients corresponding to crop uptake, consideration must be given to fertilizer efficiency (formulation or availability).

Preplant fertilizer and/or manure shall not be applied until after any deep irrigation for salt leaching has been completed.

Nutrients shall not be applied to soils if the potential for runoff exists.

Commercial fertilizer may be applied as broadcast, knifed into the soil, banding with the planter, or surface banded. Any one method may have advantages under a given set of circumstances.

Nutrient applications associated with irrigation systems shall be applied in accordance with the requirements of Irrigation Water Management (Code 449). The application rate (in/hr) and application amounts for material applied through sprinkler irrigation systems shall not be at rates that result in runoff. Nutrients applied through surface irrigation systems shall have tailwater ponds and/or delivery systems to capture and reuse all runoff. Consult the Soil Survey or the Arizona Irrigation Guide for available water holding capacity and infiltration/permeability rates for the soil(s) receiving the application. Limit application to the volume of liquid that can be stored in the root zone.

Additional Criteria Applicable to Manure or Organic By-Products Applied as a Plant Nutrient Source.

Nutrient Management Plan Reviews
NMPs should be reviewed and updated by the owner/operator or their designate at least once each year.

For required NMPs, a whole farm budget for nitrogen and phosphorus shall be developed that includes the amount of manure produced on the farm and the amount of nutrients needed for the crops grown on the farm. The budget shall be in enough detail to determine if more nutrients will need to be brought onto the farm to grow crops or if excess manure is being generated and will need to be exported.

Nutrient values of manure and organic by-products shall be determined prior to land application based on laboratory analysis. Manure and on-farm generated waste shall be analyzed for nutrient content by laboratories that meet University of Arizona approved testing methods. Manure analyses will be conducted once a year for each manure source until a reliable trend of nutrient contents has been established for that source. Manure testing will be at least once every 5 years after that or whenever a significant management change will affect manure nutrient values (for example, major changes in the feed program).

Manure must, at a minimum, be analyzed for nitrogen, phosphorus, potassium, and moisture content. In those cases where manure analysis cannot be readily obtained, acceptable NRCS and/or University of Arizona “book values” may be used for planning purposes. Acceptable values may

be found in the Agricultural Waste Management Field Handbook (AWMFH), Chapter 4 – Agricultural Waste Characteristics.

Nutrient Application Rates

All NMPs will require that the N and P application rates be determined. The "P" screening tool will be used to determine if the critical element is either nitrogen or phosphorous. If the screening tool indicates that phosphorous is critical, then the nutrient plan will be phosphorous based. All other plans will be nitrogen based.

The planned rates of nitrogen and phosphorus application recorded in the plan for each field shall be determined based on the following guidance:

- *Phosphorus Application* – When manure or other organic by-products are used, the planned rates of phosphorus application for each field shall be determined using a current soil test.

  If phosphorus is determined to be the limiting nutrient for determining nutrient application rates (Phosphorous screening tool), then the phosphorus application will be limited to phosphorus crop removal. Use P crop removal values recommended by the University of Arizona. If values are not available for a specific crop, use values given in AWMFH, Chapter 6.

- *Nitrogen Application* - Planned nitrogen application rates for each field shall match the recommended rates. If phosphorus is determined to be the limiting nutrient for determining nutrient application rates, then an additional nitrogen application, from non-organic sources, may be required to supply the recommended amounts of nitrogen.

  Manure or other organic by-products may be applied on legumes at rates equal to the estimated removal of nitrogen in harvested plant biomass.

  Animal manure and organic nutrients shall be injected or incorporated as soon as possible on annual crops or reseeded perennial crops to capture available N. Manure may be applied without incorporating if surface runoff control measures such as a grass or legume crop, heavy crop residue cover, stripcropping, or diversions have been applied. However, losses of N by NH3 volatilization are likely, thereby reducing available N from manure.

Field-Specific Risk Assessment and Resources of Concern

When animal manure or other organic by-products are applied, a field-specific assessment of the potential for nitrogen and phosphorus transport from the field shall be completed.

This field specific assessment is done using the Phosphorous screening tool, field landscape and soil properties, and locations of sensitive areas.

Identify sensitive areas adjacent to or near the fields to receive animal manure and locate them on plan maps:

- Wells and other potable water supplies
- Vegetated drainage ways or waterways
- Streams, rivers, lakes, and ponds
- Property lines.

Setbacks for spreading of manure shall be a minimum of 100 feet from drinking wells and non-community water supplies and a minimum of 300 feet from community water supplies. Greater site specific setbacks need to be considered where water supplies are located downslope from spreading sites.

Site specific setbacks or buffers will be identified and prescribed to protect sensitive areas other than drinking wells from potential pollution from animal manure applications. In lieu of using site specific setbacks or buffers to protect sensitive areas, the following are recommended setbacks:

- 25 feet from any waterway, drainage ditch, wash, arroyo, irrigation ditch, or property line.
- 100 feet from all surfaces waters including streams, canals, springs, ponds, and lakes.

The locations of sensitive areas and the setbacks or buffers to protect them shall be discussed with the producer during the development of the plan.

Heavy Metals

When sewage sludge is applied, the accumulation of potential pollutants (including arsenic, cadmium, copper, lead, mercury, selenium, and zinc) in the soil shall be monitored in accordance with US Code, Reference 40 CFR, Parts 403 and 503, and/or any applicable state or local laws or regulations.

Additional Criteria to Minimize Agricultural Non-point Source Pollution of Surface and Ground Water Resources

In areas with an identified or designated nutrient-related water quality impairment, assessments shall be completed of the potential for nitrogen and/or phosphorus transport from the field. The Phosphorous screening tool may be used to help with these assessments. The results of these assessments and recommendations shall be discussed with the producer and included in the plan.

Plans developed to minimize agricultural nonpoint source pollution of surface or ground water resources shall include practices and/or management activities that can reduce the risk of nitrogen or phosphorus movement from the field.

Additional Criteria to Improve the Physical, Chemical, and Biological Condition of the Soil.

Nutrients shall be applied in such a manner as not to degrade the soil's structure, chemical properties, or biological condition. Use of nutrient sources with high undesirable salt content will be minimized unless provisions are used to leach these salts below the crop root zone.

Nutrients shall not be applied to flooded or saturated soils when the potential for soil compaction is high.

CONSIDERATIONS

Consider other practices such as: Waste Management System (312); Waste Storage Facility (313); and Waste Utilization (633) to properly handle, store, and utilize manure and other wastes to minimize pollution of surface and ground water resources.

Consider additional practices such as Conservation Cover (327), Filter Strips (393), Irrigation Water Management (449), Conservation Crop Rotation (328), Cover and Green Manure (340), and Residue Management (329A, 329B, or 329C, and 344) to improve soil nutrient and water storage, infiltration, aeration, tilth, diversity of soil organisms, and to protect or improve water quality.

Consider induced deficiencies of nutrients due to excessive levels of other nutrients.

Consider cover crops, whenever possible, to utilize and recycle residual nitrogen.

Consider application methods and timing that reduce the risk of nutrients being transported to ground and surface
waters, or into the atmosphere. Suggestions include:

- split applications of nitrogen to provide nutrients at the times of maximum crop utilization,
- band applications of phosphorus near the seed row,
- applying nutrient materials uniformly to application areas or as prescribed by precision agricultural techniques,
- timely incorporation of land applied manure or organic by-products,
- delaying field application of animal manure or other organic by-products if precipitation capable of producing runoff and erosion is forecast within 24 hours of the time of the planned application.

Consider minimum application setback distances from other environmentally sensitive areas, such as bedrock outcrops, gullies, ditches, surface inlets, or rapidly permeable soil areas.

Consider the potential problems from odors associated with the storage and land application of animal manure, especially when applied near or upwind of residences.

Consider the potential problems from vectors (insects, rats, etc.) in associated with manure storage and application.

Consider nitrogen volatilization losses associated with the land application of animal manure. Volatilization losses can become significant, if manure is not immediately incorporated into the soil after application.

Consider the potential to affect National Register listed or eligible cultural resources.

Consider using soil test information no older than one year when developing new plans, particularly if animal manure is to be a nutrient source.

Consider annual reviews to determine, if changes in the nutrient budget are desirable (or needed) for the next planned crop.

On sites on which there are special environmental concerns, consider other sampling techniques. (For example, soil profile sampling for nitrogen, Pre-Sidedress Nitrogen Test (PSNT), Pre-Plant Soil Nitrate Test (PPSN) or soil surface sampling for phosphorus accumulation or pH changes.)

Consider recommendations from animal nutritionists regarding modification of the animal's diet to reduce the manure nutrient content and to enhance the producer's ability to manage manure effectively.

PLANS AND SPECIFICATIONS

Plans and specifications shall be in keeping with this standard and shall describe the requirements for applying the practice to achieve its intended purpose(s), using nutrients to achieve production goals and to prevent or minimize water quality impairment.

The following components shall be included in the nutrient management plan:

- aerial photograph or map and a soil map of the site,
- current and/or planned plant production sequence or crop rotation,
- results of soil, plant, irrigation water, manure and organic by-product sample analyses, and wastewater as applicable,
- realistic yield goals for the crops in the rotation,
- quantification of all nutrient sources,
- recommended nutrient rates, timing, form, and method of application and incorporation,
- location of designated sensitive areas or resources and the associated nutrient management restriction, or setbacks to protect them,
- guidance for implementation, operation, maintenance, and record keeping and,
- complete nutrient budget for nitrogen, phosphorous, and potassium for the rotation or crop sequence.

If increases in soil phosphorus levels are expected, plans shall document:

- the soil phosphorus levels at which it may be desirable to convert to phosphorus based implementation,
- the relationship between soil phosphorus levels and potential for phosphorus transport from the field, and
- the potential for soil phosphorus drawdown from the production and harvesting of crops.

When applicable, plans shall include other practices or management activities as determined by specific regulation, program requirements, or producer goals.

In addition to the requirements described above, plans for nutrient management shall also include:

- discussion about the relationship between nitrogen and phosphorus transport and water quality impairment. The discussion about nitrogen should include information about nitrogen leaching into shallow ground water and potential health impacts. The discussion about phosphorus should include information about phosphorus accumulation in the soil, the increased potential for phosphorus transport in soluble form, and the types of water quality impairment that could result from phosphorus movement into surface water bodies.
- discussion about how the plan is intended to prevent the nutrients (nitrogen and phosphorus) supplied for production purposes from contributing to water quality impairment.

- a statement that the plan was developed based on the requirements of the current standard and any applicable Federal, state, or local regulations or policies; and that changes in any of these requirements may necessitate a revision of the plan.

All NMPs shall be approved and bear the signature of a qualified person to certified that the plans have met this standard and all applicable Federal, state, and local regulations.

OPERATION AND MAINTENANCE

The owner/client is responsible for safe operation and maintenance of this practice including all equipment. Operation and maintenance addresses the following:

- periodic plan review to determine if adjustments or modifications to the plan are needed. As a minimum, plans will be reviewed and revised, if necessary, with each soil test cycle.

- protection of fertilizer and organic by-product storage facilities from weather and accidental leakage or spillage.

- calibration of application equipment to ensure uniform distribution of material at planned rates.

- documentation of the actual rate at which nutrients were applied. When the actual rates used differ from or exceed the recommended and planned rates, records will indicate the reasons for the differences.

- Maintaining records to document plan implementation. As applicable, records include:

  soil test results and recommendations for nutrient application,

  quantities, analyses, and sources of nutrients applied,

  dates, duration, and method of nutrient applications,

  volume of irrigation water applied,

  crops planted, planting and harvest dates, yields, and crop residues removed, and

  dates of review, person performing the review, and recommendations that resulted from the review.

Records should be maintained for five years; or for a period longer than five years if required by other Federal, state, or local ordinances, or program or contract requirements.

Workers should be protected from and avoid unnecessary contact with chemical fertilizers and organic by-products. Protection should include the use of protective clothing when working with plant nutrients. Extra caution must be taken when handling ammonia sources of nutrients, or when dealing with organic wastes stored in unventilated enclosures.

When cleaning nutrient application equipment, dispose of the wash water properly. Excess material should be collected and stored or field applied in an appropriate manner. Excess material should not be applied on areas of high potential risk for runoff and leaching.

The disposal or recycling of nutrient containers should be done according to state and local guidelines or regulations.

REFERENCES

Plans for nutrient management shall be developed in accordance with:

Policy requirements of the:

- NRCS General Manual Title 450, Part 401.03 (Technical Guides, Policy and Responsibilities)
- NRCS General Manual Title 190, Part 402 (Ecological Sciences, Nutrient Management, Policy)

Technical requirements of the:

- NRCS Field Office Technical Guide (FOTG)

Procedures contained in the:

- National Planning Procedures Handbook (NPPH)
- NRCS National Agronomy Manual (NAM) Section 503

These references should be consulted if more guidance is needed than what this standard provides.

Doerge, T.A., Roth, R.L., and Gardner, B.R., Nitrogen Fertilizer Management in Arizona, 191025, University of Arizona, May, 1991.

TECHNICAL NOTE

US DEPARTMENT OF AGRICULTURE NATURAL RESOURCES CONSERVATION SERVICE
Agronomy Technical Note - XXX Phoenix, Arizona
May, 2000

"DRAFT"
PHOSPHORUS ASSESSMENT TOOL
For Arizona

BACKGROUND

Water quality problems associated with phosphorus are generally confined to surface water. Phosphorus (P) in most Arizona soils is tightly held to soil particles and does not leach. However, the P held in organic phases from residues such as manure can dissolve in water and be lost if improperly managed. Adsorbed P on soil particles can cause surface water contamination as P containing sediments move off the land in agricultural runoff.

P is the second major element utilized by actively growing plants but differs considerably from nitrate in its water solubility and mobility. Soil solution P levels are typically less than 0.01 ppm in most soils, and ground water levels seldom exceed 0.05 ppm. Between 20 and 80% of the total P in soils is held in organically combined forms with a large amount of the organic-P held by the active microbial biomass. Much P fertilizer applied to soils is retained in the near-surface layer in various inorganic precipitates and organically combined forms that prevent it from leaching. Sandy soils may not retain or bind P to the same extent as previously discussed, but P migration downward to ground water is still generally minimal. The highly calcareous nature of our soils causes P to be very unavailable.

While the risk of ground water contamination by P from crop production systems can be assumed to be limited, the solid forms of P that accumulate in surface soil are subject to loss via erosion. Runoff losses to surface waters are the major water quality risk from P. Increased public and regulatory concern over the use and application of P to agricultural lands is based mainly upon the fact that increased P loading to surface waters can cause eutrophication. Algal and aquatic weed growth in most inland surface water systems is P-limited and elevated P loading leads to algal blooms and mats, heavy growth of aquatic plants and weeds, deoxygenation, and occasional problems with drinking water taste and odor.

P runoff from permanently vegetated areas such as hayland, pasture, rangeland or forest can be significant, and largely occurs as traces of orthophosphate ions in solution. Organic P additions from riparian leaf and stem inputs are also possible. Where erosion risk increases, such as for annual crops with conventional tillage, the total-P loss increases greatly as the P is moved in solid particulate form from the

eroding soil. Water-soluble P is immediately available for biological uptake when the sediment-bound or particulate P forms are released over longer periods and it is referred to as "bioavailable particulate P". The overall impact of a given production system on P loadings to local surface waters will therefore be primarily dependent upon relative rates of sediment loss and the system's influence on P levels in eroding soil surfaces.

P can easily enter surface water through dislocation and erosion of soil particles that maintain this tightly bound nutrient. Surface erosion can remove soil particles containing P. Surface soils, which are the most susceptible to erosion, generally have much higher P levels than deeper soil horizons due to applications of fertilizers, manure, roots, residue and sludge that contain this nutrient. The higher the P content of the soil, the more P will erode per ton of soil lost. Once into the surface water system, P is a major contributor to excessive algae growth which can have detrimental enviroArizonaental and aesthetic consequences. Little P is lost by leaching, though it moves more freely in sandy than in clay soils. Erosion and crop removal are the primary pathways for P removal for most soils in Arizona. Phosphorus dissolved in runoff water may be an additional P loss pathway for very high P amended soils and surface-applied organic material.

The interaction between the particulate and dissolved P in the runoff is very dynamic and the mechanism of transport is complex. Therefore, it is difficult to predict the transformation and ultimate fate of P as it moves through the landscape.

PURPOSE

The purpose of the Phosphorus Index is to provide field staffs, watershed planners, and land users with a tool to assess the various landforms and management practices for potential risk of phosphorus movement to water bodies. The Phosphorus Index ranks sites where the risk of phosphorus movement may be relatively higher than that of other sites. When the parameters of the index are analyzed, it is apparent that an individual parameter or parameters may be influencing the index disproportionately. These identified parameters are the basis for planning corrective soil and water conservation practices and management techniques.

This index is used as a tool for understanding the relative contribution that individual landform and management parameters have toward risk of phosphorus movement and will provide a method for developing management guidelines for phosphorus at the site to lessen their impact on water quality.

SITE CHARACTERISTICS

A number of soil, hydrology, and land management site characteristics describe the landform. The **Phosphorus Index Rating for Arizona** (Table 1) uses parameters that can have an influence on phosphorus availability, retention, management, and movement. These include:

1. Available phosphorus soil test levels, given in soil laboratory test units. (Usually the Olsen-P method ($NaHCO_3$ extraction) for Arizona soils, neutral to calcareous soils).
2. Phosphorus fertilizer (both organic and inorganic) application rates, in pounds available phosphate (P_2O_5) per acre.
3. Organic phosphorus source application methods.
4. Phosphorus fertilizer application methods.
5. Proximity of nearest field edge to named stream or lake measured in feet.
6. The erosion rate, in tons per acre per year.
7. Potential Runoff using permeability and slope.
8. Irrigation erosion potential, based on slope (S) in percent and flow rate (Q) in gallons/min.
9. Grazing management, including imported feeds.
10. Field edge buffers.

Field specific data for the ten site characteristics of the Phosphorus Index are readily available at the field level. Some analytic testing of the soil and organic material is required to determine the rating levels. This soil and material analysis is considered essential as a basis for the assessment.

The P Index is a simple 10 by 5 matrix that relates site characteristics with a range of value categories. The ten characteristics are:

1) Soil Test P Level
2) P Application Rate
3) Organic P Source Application Method
4) Fertilizer P Application Method
5) Proximity of Nearest Field Edge to Named Stream or Lake
6) Soil Erosion
7) Runoff Class
8) Irrigation Erosion
9) Grazing Management
10) Conservation Buffers

The five value categories are:

Very low
Low
Medium
High
Very high

Each site characteristic is rated VERY LOW, LOW, MEDIUM, HIGH, or VERY HIGH, by determining the range rating for each value category. For example: Soil test P ranges of <8 ppm for very low, 8-14 ppm for low, 15-22 ppm for medium, 23-30 ppm for high, and >30 ppm for very high were assigned to each of the value categories.

DEFINITIONS

Soil Test P

Arizona soils are usually low in plant available phosphorus because phosphorus is quickly tied up in calcareous soils. The bicarbonate P soils test (also know as Olsen-P soil test or Sodium bicarbonate-P test), it measures water soluble P, highly soluble calcium P, and organic P. This type of test should be specified for most soils in Arizona, except if the soil is on the acid side (pH < 7). Low pH soils should use a Bray test for P.

For cropland, take soil samples from the top 12 inches to assess the level of "available P" in the surface layer of the soil. For pasture or hayland, the sample should be 4 to 6 inches. At least 10 subs-samples should be taken in the field of concern. The "available P" is the level customarily given in a soil test interpretation by the Cooperative Extension Service or commercial soil test laboratories. The soil test P range in each value category are: Very Low, <8 ppm; Low, 8-15 ppm; Medium, 15-23 ppm; High, 23-30 ppm; and Very High, >30 ppm.

The soil test level for "available P" does not ascertain the total P in the surface soil. It does however, give an indication of the amount of total P that may be present because of the general relationship between the forms of P (organic, adsorbed, and labile P) and the solution P available for crop uptake.

P Application Rate

The P application rate is the amount, in pounds per acre (lbs/ac), of phosphate (P_2O_5) from all sources that is applied to the soil. The rate ranges in each value category ate: Very Low, none applied; Low, 1-30 lbs/ac; Medium, 31-90 lbs/ac; High, 91-150 lbs/ac; and Very High, >150 lbs/ac.

Organic P Source Application Method

The manner in which organic P material is applied to the soil and the time that the organic material is exposed on the soil surface until crop utilization can determine potential P movement. Incorporation implies that the organic P material is buried below the soil surface at a minimum of three to six inches. The value categories of increasing severity, ranging from no application to surface applied more than 3 months before planting, and depicts the longer surface exposure time between organic P material application, incorporation, and crop utilization. The longer the material sits on the soil surface the greater the chance for surface runoff.

Fertilizer P Application Method

The manner in which P fertilizer is applied to the soil and the amount of time that the fertilizer is exposed on the soil surface until crop utilization effects potential P movement. Incorporation implies that the fertilizer P is buried below the soil surface at 3 to 6 inches. The value categories of increasing severity, ranging from no application to surface applied more than 3 months before planting, depict the longer surface exposure time between fertilizer application, incorporation, and crop utilization. The longer the material sits on the surface the greater the potential for surface runoff.

Nearest Field Edge to Named Stream or Lake

This factor considers the potential flow distance from the edge of the field closest to the water body to the water body. The closer the water body to the edge of the field, the higher the parameter category value. These values should consider the local topography, existing setback, and buffer regulations for application of nutrient sources. Local or state guidelines should be used where available.

Soil Erosion

Soil erosion is defined as the loss of soil along the slope or unsheltered distance caused by the processes of water and wind. Soil erosion is estimated from erosion prediction models including the Revised Universal Soil Loss Equation (RUSLE), for water erosion and Wind Erosion Equation (WEQ), for wind erosion. Erosion induced by irrigation is calculated by other convenient methods. The value category is given in tons of soil loss per acre per year (ton/acre/year). These soil loss prediction models do not predict sediment transport and delivery to a water body. The prediction models are used in this index to indicate a movement of soil, thus potential for sediment and attached phosphorus movement across the slope or unsheltered distance and toward a water body.

Runoff Class

The runoff class is the runoff potential of soluble P moving from locations of placement. The runoff class of the site can be determined from soil survey data and slope measurements in the field. Guidance in determining the runoff class is based on soil permeability classes and the percent slope of the site (**Table 2** – Adapted from the USDA-NRCS National Soil Survey Handbook). The result of using the matrix relating soil permeability class and slope provides the value categories: NEGLIGIBLE, VERY LOW, LOW, MEDIUM, HIGH, and VERY HIGH. Note NEGLIBLE and VERY LOW are combine so that a 5 factor rating for the matrix can be maintained.

Surface Irrigation Erosion

Potential P loss resulting from furrow irrigation-induced erosion is considered by inclusion of a rating system based on soil susceptibility to particle detachment by hydraulic shear and flow rate of water in the furrow. The susceptibility to detachment is given by a relative ranking of soil erodibility classes under furrow irrigation (**Table 3**). These classes are an initial attempt at a relative ranking based on inherent stable and static soil properties (i.e., texture and clay mineralogy). There are temporal variations

in the relative erodibility and actual amount of erosion with furrow erosion. These changes in erodibility are a function of soil properties and management. However, no attempt is made to consider temporal soil properties or management factors in the rating. The introduced flow rate in the furrow (Q) is given by the irrigation water management plan and recorded as gallons per minute (gal/min). The furrow slope (S) of the site is given as a percentage (feet per 100 feet). (See USDA-NRCS National Engineering Handbook 15, chapter 5). The product of flow rate (Q) and slope (S) is used to determine the value category.

Grazing Management

Grazing management relates to the recycling of phosphorus nutrients by grazing fields that are also manure application fields. Supplemental feeding in the application field imports additional P with feed and concentrates in animals, increasing the rating. There are 5 value categories based on how grazing is done. They are Not Grazed, Grazed Crop Residues, Pasture with less than 30% of the feed needed brought in, Pasture with 30 to 80% of the feed needed brought in, and Pasture with 80 to 100% of the feed needed brought in.

Conservation Buffers

Conservation buffers are areas or strips of land maintained in permanent vegetation to help control pollutants and manage other environmental problems. Contour Buffer Strips, Field Borders, Filter Strips, Grass Waterways with Vegetated Filters, and Riparian Forest Buffers are examples of conservation buffers. Conservation buffers clean runoff, by helping stop sediment, and adsorb P. With buffers, wider is better. Points are assigned based on the buffer width.

PROCEDURES FOR MAKING AN ASSESSMENT

Each site characteristic has been assigned a weighting value based on reasoning that one particular site characteristic may be more prominent than another at allowing potential phosphorus movement from the site. There is scientific basis for concluding that these relative differences exist; however, the absolute weighting factors given are currently based on professional judgment. The site characteristic weighting factors are:

Site Characteristics	Weighting Factors
Soil Test P Level	1
Phosphorus Application Rate	1
Organic Phosphorus Source Application Method	1
Phosphorus Fertilizer Application Method	1
Proximity of Field Edge to Named Stream or Lake	1.5
Soil Erosion	1.5
Runoff Class	1.5
Irrigation Erosion	1.5
Grazing Management	0.5
Conservation Buffers	1.5

The value categories are rated using a log base of 2. The greater the ratings, the proportionally higher are the values. The higher the value, the higher potential for significant problems related to phosphorus movement.

The value ratings are:

None or very low	= 0
low	= 1
medium	= 2
high	= 4
very high	= 8

The P Index Worksheet for Arizona can be used to record the values from the index for a specific field. To make an assessment using the P Index, use **Table 1** (P Index Worksheet for Arizona), select a rating value for each site characteristic using the categories NONE or VERY LOW, LOW, MEDIUM, HIGH, or VERY HIGH. The value in the table is the result of multiplying the site characteristic weighting factor by the rating value to get the weighted value for that characteristic (see index value). Proceed to rate and factor each characteristic of the index. Sum the values for all ten characteristics, and compare the total using the Phosphorus Index Rating for Arizona, Weighted Factor Chart (**Table 4**). A description of site vulnerability by the Hazard Class Rating is given to describe the potential loss of P for a given field.

A Microsoft Excel spreadsheet is available (PI-ARIZONA.xls) to automate the evaluation. The file is posted on the NRCS ARIZONA web site. The file name is **PI-ARIZONA.xls**. The location of the file on the web is **www.Arizona.usda.gov/techserv/techres1.htm**. If unable to down load, contact the state agronomist.

INTERPRETATIONS OF SITE VULNERABLITY RATINGS (P HAZARD CLASS) FOR THE P INDEX

P Hazard Class Rating Described

VERY LOW OR LOW – A field that has a VERY LOW OR LOW potential for P movement offsite. If farming practices were maintained at current levels, the probability of an adverse impact to surface water resources from P losses from the field would be very low or low. **Nutrient application can be based on nitrogen for all sources.**

MEDIUM – A field that has a MEDIUM potential for P movement offsite. The probability for an adverse impact to surface water resources is greater than that from a LOW vulnerability rated site. Some remedial action should be taken to lessen the probability of P movement. **Nutrient application can be based on nitrogen for all sources.**

HIGH- This site has a HIGH potential for P movement from the site. There is a high probability for an adverse impact to surface water resources unless remedial action is taken. Soil and water conservation as well as phosphorus management practices are necessary to reduce the risk of P movement and probable water quality degradation. **Nutrient application must be P based at 1.5 times crop removal when manure or other organic by-products are applied.** When inorganic fertilizer is applied, its rate must follow the Land Grant University's P recommendation for crop production.

VERY HIGH - This site has a VERY HIGH potential for P movement from the site. The probability for an adverse impact to surface water resources is very high. Remedial action is required to reduce the risk of P movement. All necessary soil and water conservation practices plus a phosphorus management plan must be put in place to reduce the potential of water quality degradation. **Nutrient application must be P based at crop removal when manure or other organic by-products are applied.**

EXCESSIVE- This site has a VERY, VERY HIGH potential for P movement from the site. The probability for an adverse impact to surface water resources is extreme. Remedial action is required to reduce the risk of P movement. All necessary soil and water conservation practices plus a phosphorus management plan must be put in place to reduce the potential of water quality degradation. **No application of P is permitted.**

PRECAUTIONS IN THE USE OF THE PHOSPHORUS INDEX

The Phosphorus Index is an assessment tool intended to be used by planners and land users to assess the risk that exists for phosphorus leaving the landform site and travelling toward a water body. It also can be used to identify the critical parameters of soil, topography, and management that most influence the movement. Using these parameters, the index can then help select in the selection of management alternatives that would significantly address the potential impact and reduce the risk. The index is intended to be part of the planning process that takes place between the land user and resource planner. It can be used to communicate the concept, process, and results that can be expected if various alternatives are used in the management of the natural resources at the site. THE PHOSPHORUS INDEX IS NOT INTENDED TO BE AN EVALUATION SCALE FOR DETERMINING WHETHER LANDUSERS ARE ABIDING WITHIN WATER QUALITY OR NUTRIENT MANAGEMENT STANDARDS THAT HAVE BEEN ESTABLISHED BY LOCAL, STATE, OR FEDERAL AGENCIES. Any attempt to use this index as a regulatory scale would be grossly beyond the intent of the assessment tool and the concept and philosophy of the working group that developed it. As discussed in this technical note, this Phosphorus Index has been adapted to local conditions by a process of regional adaptations of the site characteristic parameters. This local development involves those local and state agencies and resource groups that are concerned with the management of phosphorus. After this index was adapted to this locality, it was tested by the development group to assure that the assessments are giving valid and reasonable results for the region. Field testing of the index was used to assess the value of the index.

Developed by:
Robert Flynn
Asst. Professor, Agronomy
New Mexico State University
Agricultural Science Center
Artesia, New Mexico

Mike Sporcic
State Agronomist
USDA-NRCS
Albuquerque, New Mexico

Linda Scheffe
Water Quality Specialist
USDA-NRCS
Albuquerque, New Mexico

Adapted for use in Arizona by:
Donald Walther
Cropland Specialist
USDA-NRCS
Tucson, Arizona

TABLE 1. PHOSPHORUS INDEX WORKSHEET FOR ARIZONA

PHOSPHORUS INDEX WORKSHEET for Arizona						
Client Name:		**Field(s):**		**Date:**		
Planner:		**Location:**		**Crop:**		
Permeability (in/hr):		**Slope (%):**		**Planned/Exist.:**		
Site Characteristic	**Place an X in the appropriate box for each of the Site Characteristic listed below.**					**Sub Total**
Soil Test P Level	Very Low <8 ppm	Low 8-15 ppm	Moderate 15-23 ppm	High 23-30 ppm	Very High >30 ppm	
Phosphorus (P_2O_5) Application Rate	None Applied	1-30 lbs/ac P_2O_5	30-90 lbs/ac P_2O_5	90-150 lbs/ac P_2O_5	>150 lbs/ac P_2O_5	
Organic Phosphorus Source Application Method	None Applied	Placed with Planter Deeper than 2 in.	Incorporated Immediately before Planting	Incorp. >3 Mo. Before Planting **or** Surface Applied <3 Mo. before Planting	Surface Applied >3 Months Before Planting	
Phosphorus Fertilizer Application Method	None Applied	Placed with Planter Deeper than 2 in.	Incorporated Immediately before Planting	Incorp. >3 Mo. Before Planting **or** Surface Applied <3 Mo. before Planting	Surface Applied >3 Months Before Planting	
Proximity of Nearest Field Edge to Named Stream or Lake	Very Low >1000 feet	Low 500-1000 feet	Medium 200-500 feet	High 30-200 feet	Very High <30 feet	
Soil Erosion (WEQ & RUSLE)	Very Low <1 t/ac	Low 1-3 t/ac	Medium 3-5 t/ac	High 5-15 t/ac	Very High >15 t/ac	
Runoff Class (Runoff Class Table 2)	Very Low	Low	Medium	High	Very High	
Irrigation Erosion (furrow)	Not Irrigated or No Furrow Irrigation	Tailwater Recover **or** QS<6 for very erodible soils **or** QS<10 for resistant soils	QS>10 for erosion resistant soils	QS>10 for erodible soils	QS>6 for very erodible soils	
Grazing Management	Not Grazed	Graze Crop Residues	Pasture <30% Dry Matter as Supplemental Feed	Pasture 30 to 80% Dry Matter as Supplemental Feed	Pasture 80 to 100% Dry Matter as Supplemental Feed	
Vegetative Buffers	>100 ft wide	65-100 ft wide	20-65 ft wide	<20 ft wide	No buffer	
P Hazard Class:					**Total Index Points:**	
			Phosphorus Application Classification:			

Phosphorus Index Classification			
Index Pts.	**P Haz. Class**	**P Application Classification**	
0-10	Very Low	N Based	
10-17	Low	N Based	
17-27	Medium	N Based	
27-37	High	P Based (1.5 x crop removal)	
37-47	Very High	P Based (at crop removal)	
>47	Excessive	No P application allowed	

TABLE 2. RUNOFF CLASS BASED ON FIELD SLOPE AND PERMEABILITY CLASS

Runoff Class Based on Field Slope and Permeability Class[1]								
Slope %	**Very Rapid >20**	**Rapid 20-6**	**Moderately Rapid 6-2**	**Moderate 2-0.6**	**Moderately Slow 0.6-0.2**	**Slow 0.2-0.06**	**Very Slow 0.06-0.0015**	**Impermeable <0.0015**
	(in/hr)	(in/hr)	(in/hr)	(in/hr)	(in/hr)	(in/hr)	(in/hr)	(in/hr)
Level or Concave	**N**	**N**	**N**	**N**	**N**	**N**	**N**	**VH**
>0 to 1	**N**	**N**	**N**	**N**	**L**	**M**	**H**	**VH**
1 to <5	**N**	**N**	**VL**	**L**	**M**	**H**	**VH**	**VH**
5-<10	**VL**	**VL**	**L**	**M**	**H**	**VH**	**VH**	**VH**
10-<20	**VL**	**VL**	**L**	**M**	**H**	**VH**	**VH**	**VH**
>20	**L**	**L**	**M**	**H**	**VH**	**VH**	**VH**	**VH**

Note: Adapted from the National Soil Survey Handbook.

[1]Based on the most restrictive horizon above 20 inches. If the most restrictive horizon is between 20 and 40 inches. The runoff estimate should be reduced by one class (e.g., medium to low). If the most restrictive layer in the soil is below 40 inches, use the lowers class that occurs above 40 inches.

Runoff Classes: N-negligible, VL-very low, L-low, M-medium, H-high, VH-very high

Special Rule 1 - A soil horizon that has a seasonal water table is assumed to have very slow permeability.

Special Rule 2 - Runoff is rated as "negligible" (N) if the soil is in a depression, regardless of the permeability.

Assumptions:
1. Bare soil surface.
2. Low water retention due to ground surface irregularities.
3. Steady ponded infiltration rate.
4. Bulk density of upper 10" is within normal range for the soil.

TABLE 3. FURROW IRRIGATION EROSION SITE CHARACTERISTICS

I. QS value

Q = flow rate of water introduced into the furrow (in gallons per minute, GPM).
S = furrow slope (in feet per 100 feet, percent).

Example: For a 5 gpm flow rate and a 2% furrow grade:
QS = 5 gpm * 2% grade = 10

II. Relative ranking of soil erodibility under furrow irrigation

Use local criteria to determine the relative erodibility of the soil in question. If no local criteria are established, use the following for guidance:

A. <u>Very Erodible Soils</u>
Soils in which the surface layer texture is silt, or silt loam with < 15% nonmontmorillonitic clay, or fine and very fine sandy loam with < 15% nonmontmorillonitic clay, or loamy fine sand, or loamy very fine sand. Contact a soil scientist for clay content and mineralogy.

B. <u>Erosion-Resistant Soils</u>
Soils that have the following characteristics in the upper 5 cm of the surface layer:
silty clay, clay, or sandy clay texture, weak or massive structure, and mixed or montmorillonitic clay mineralogy.

other soils that have medium or coarse blocky structure or coarse granular structure (i.e. natural aggregates > 10 mm) and very firm or firmer rupture resistance class in the moist state (i.e. requires at least strong force between thumb and forefinger to cause failure of a moist soil aggregate).

See the Soil Survey Manual (1993), chapter 3 for description of soil structural aggregates (peds), and table 3-14 for soil rupture-resistance classes.

C. <u>Erodible Soils</u>
Soils that have a surface layer not fitting any of the above criteria.

TABLE 4. PHOSPHORUS INDEX RATING FOR ARIZONA: WEIGHTING FACTOR CHART

Phosphorus Index Rating for Arizona						
		Weighting Factor Times the Column Factor				
Site Characteristic	**Wt. Factor**	**None or Very Low**	**Low**	**Medium**	**High**	**Very High**
		0	**1**	**2**	**4**	**8**
Soil Test P Level	**1**	Very Low <8 ppm	Low 8-15 ppm	Moderate 15-23 ppm	High 23-30 ppm	Very High >30 ppm
		0	**1**	**2**	**4**	**8**
Phosphorus (P_2O_5) Application Rate	**1**	None Applied	1-30 lbs/ac P_2O_5	30-90 lbs/ac P_2O_5	90-150 lbs/ac P_2O_5	>150 lbs/ac P_2O_5
		0	**1**	**2**	**4**	**8**
Organic Phosphorus Source Application Method	**1**	None Applied	Injected 3-6 inch below surface	Incorporated Immediately before Planting	Incorporated >3 Months Before Planting **or** Surface Applied <3 Months before Planting	Surface Applied
		0	**1**	**2**	**4**	**8**
Phosphorus Fertilizer Application Method	**1**	None Applied	Placed with Planter Deeper than 2 in.	Incorporated Immediately before Planting	Incorporated >3 Months Before Planting **or** Surface Applied <3 Months before Planting	Surface Applied
		0	**1**	**2**	**4**	**8**
Proximity of Nearest Field Edge to Named Stream or Lake	**1.5**	Very Low >1000 feet	Low 500-1000 feet	Medium 200-500 feet	High 30-200 feet	Very High <30 feet
		0	**1.5**	**3**	**6**	**12**
Soil Erosion (WEQ & RUSLE)	**1.5**	Very Low <1 t/ac	Low 1-3 t/ac	Medium 3-5 t/ac	High 5-15 t/ac	Very High >15 t/ac
		0	**1.5**	**3**	**6**	**12**
Runoff Class (Runoff Class Table 2)	**1.5**	Negligible & Very Low	Low	Medium	High	Very High
		0	**1.5**	**3**	**6**	**12**
Irrigation Erosion	**1.5**	Not Irrigated **or** No Furrow Irrigation	Tailwater Recover **or** QS<6 for very erodible soils **or** QS<10 for other soils	QS>10 for erosion resistant soils	QS>10 for erodible soils	QS>6 for very erodible soils
		0	**1.5**	**3**	**6**	**12**
Grazing Management	**0.5**	Not Grazed	Only Graze Crop Residues	Pasture <30% Dry Matter as Supp. Feed	Pasture 30 to 80% Dry Matter as Supplemental Feed	Pasture 80 to 100% Dry Matter as Supp. Feed
		0	**0.5**	**1**	**2**	**4**
Vegetative Buffer	**1.5**	>100 ft wide	65-100 ft wide	20-65 ft wide	<20 ft wide	No Buffer
		0	**1.5**	**3**	**6**	**12**

Phosphorus Index Classification		
Index Pts.	**P Hazard Class**	**P Application Classification**
0-10	Very Low	N Based
10-17	Low	N Based
17-27	Medium	N Based
27-37	High	P Based (1.5 x crop removal)
37-47	Very High	P Based (at crop removal)
>47	Excessive	No P application allowed

WORKSHEETS
FOR
PROVIDING NRCS TECHNICAL ASSISTANCE
on
ANIMAL FEEDING OPERATIONS (AFO)
Arizona

GENERAL

Type of Assistance Provided

As requested, NRCS may provide inventory, evaluation, planning, design, application, and follow up assistance on animal feeding operations (AFOs) including poultry operations.

General Information

General information provided per telephone, office visit or field visits may consist of:

A. Discussion of available NRCS technical assistance (e.g., inventory, Design Report, Animal Waste Management Plan, construction assistance, and follow up).

B. Discussion of NRCS concerns - soil, water, air, plants, animals, and human.

C. Discussion of Federal cost share available for existing operations (e.g., EQIP and PL-83-566 programs, where and when to sign up, FSA facility loans, and tax credits).

D. Overview of guidelines for using manure and polluted effluent as a resource in a manner that does not degrade air, soil, and water resources.

E. Overview of the U.S. Clean Water Act, as amended, and administrated by EPA. The Arizona Department of Environmental Quality (ADEQ) role and administration of the Arizona General Permit for AFOs, with owner/operator compliance by implementing Best Management Practices (BMPs). Need for an individual permit if a general permit is not used. Steps to secure and keep valid an individual permit. In general, avoid an individual permit if possible.

F. Discussion with the client on which permits are required prior to construction (404, 401, construction permit, temporary construction easement, blue stake, etc.).

G. Discussion with the client on the potential flood hazard. The client needs to obtain floodplain map from the appropriate agency. In general, do not build within the 100-year floodplain. Any existing facility within the floodplain might have to be relocated.

H. Discussion on why the client is requesting assistance. Why are we willing to help and why is NRCS/client confidentiality important?

Request for Assistance

The following information should be known prior to arriving at the AFO site:

Name of Operation _____

Address _____

Name of Owner(s)_____Phone: _____

Name of Manager_____Phone: _____

Best time of day to:

Contact Owner by Phone: _____

Contact Manager by Telephone: _____

Visit AFO site _____

Make field surveys with on site assistance: _____

G-1. Type of Operation_____

G-2. Size of Operation _____

G-3. Changes Proposed _____

G-4. Location of AFO _____

More specifically described as being within the _____ of the _____ of Section _____, Township _____, Range _____ of the _____ Meridian.

G-5. Problems:

_____

_____

_____

_____

_____

G-6. Opportunities:

_____

_____

_____

_____

_____

G-7. Request Resource Support Team assistance to:

_____ Prepare Design Report and Waste Management Plan.
_____ Review prepared Design Report and Waste Management Plan.
_____Assist state office staff to review and approve Design Report and Waste Management Plan.

G-8. Existing and Proposed Site Plan with Data Sheet(s)

a. General AFO layout: buildings, feedlots, liquid and solid storage areas, and disposal area(s), etc.

Show:

1. Farm boundaries applicable to agricultural waste plan.
2. Disposal area(s).
3. Feedlot area.
4. Storage area for solids and/or effluent.
5. Soil survey with key to soil series and textures.
6. Urban development.
7. Roads, map scale, north arrow, etc.
8. Distance from state or federal highway, nearest town, or other landmark

b. Detail AFO facility layout and site plan, using drawings and sketches on 8 1/2" x 11" or 11" x 17" paper, plus necessary data sheets showing:

1. Building size and use (e.g., milking parlor, holding area, feed storage, farrowing, nursery, feeder, finishing, broilers, laying, etc.).

2. Domestic and AFO well(s) with depth, capacity, and casing depth.

3. Feed lot/corrals showing surface drainage direction and slope in ft./ft. or ft./100 ft. (%), and dikes, ditches, or waterways to control surface runoff.

4. Solid waste storage areas not included in feedlot/corrals (show dimensions).

5. Liquid waste storage areas and type of facility, (e.g., underground concrete tank, excavated earth pond, excavated/embankment earth lagoon, etc.). Show dimensions.

6. Sumps, pumps, pipelines, open channels, and non-building facilities for collecting and transporting animal waste. Data sheet information should include:

   Sumps - type of construction, size, condition, maximum and minimum effluent (water) surface.

   Pumps - make, model number, impeller diameter, where pump was purchased, time to pump sump from maximum to minimum water surface.

   Pump motor - horsepower, shaft speed in rpm.

   Pipelines - material, size, head available or grade.

   Open channels - material, size, and grade.

7. Liquid/solid separating screen, screen tower, and temporary solids storage bunker site.

8. Use dashed line to show proposed changes on the above maps/drawings.

G-9. Surveys Needed

a. Type of field survey — Check if needed

1. Pipelines, pumps, etc. _____
2. Dikes for surface water control _____
3. Open channel for surface water control _____
4. Storage pond/lagoon(s) _____
5. Runoff control _____
6. Other _____

b. Appointment(s) to complete field surveys. _____

_____

_____

_____

_____

Date: _____

DAIRY

Site Visit Worksheet

Operation Represented by: _____

NRCS Represented by: _____

D-1. Confirm or Modify General Information: _____
_____
_____

a. Dairy water usage from water bills _____
_____

D-2. Cow Holding Area:

a. Number of cows milked in a group _____, breed _____.

b. Average weight of cows being milked is _____ pounds.

c. Number of groups per milking _____.

d. Average time cows are in the holding area _____ minutes.

e. Size of holding area, length _____ ft., width _____ft.

f. Floor slope (if hydraulic flushed) _____ft/ft.

g. Are floor sprinklers used to wash udders? Yes ___ No ___; *If No, go to (h).*

1. Number of floor sprinklers _____.
2. Capacity of EACH sprinkler head _____ gallons/minute; or sprinkler nozzle size _____ in., nozzle pressure _____ psi.
3. Total length of time floor sprinklers are operated per group _____ minutes/milking.

h. Are evaporative cooling mister nozzles used in holding area? Yes ___ No ___; *If No, go to (i).*

1. Number of mister nozzles used for cooling cows _____.
2. Capacity of mister nozzles _____ gallons/hour.
3. Hours per day operated _____.
4. Months and date of operation _____ to _____.
5. Estimate percent of water reaching floor _____%.

i. Cleaning cow holding area between milkings with high pressure hose and nozzle:

1. Cleaning _____ times per day, average time per cleaning is _____ minutes.
2. Capacity of hose and nozzle _____ gal/min; or hose valve (faucet) pressure _____psi, hose diameter _____ inches, hose length _____ feet; or nozzle diameter _____ inches and nozzle pressure _____ psi.

D-3. Milking parlor:

a. Size and configuration of milking parlor _____.

Example: Double 16 herringbone (32 stalls total).

b. Milkings per day:

_____ times/day _____ _____ through _____ _____
(number) (month) (day) (month) (day)

_____ times/day _____ _____ through _____ _____
(number) (month) (day) (month) (day)

c. Approximate time cows are in milking parlor: _____ minutes per milking.

d. Detail washing udders with warm water plus keeping milking equipment and floor areas clean while milking _____ gallons per cow per day.

e. Cleaning milking parlor between milkings with high-pressure hose:

Detail cleaning _____ times/day, average time per cleaning _____ minutes.

General cleaning _____ times/day, average time per cleaning _____ minutes.

f. Capacity of nozzle and hose _____ gallons/minute; or hose valve (faucet) pressure _____ psi, hose diameter _____ inches, hose length _____ feet; or nozzle diameter _____ inches and nozzle.

D-4. Milk room, miscellaneous, milking equipment, bulk tank, and pipeline cleaning

a. Volume of water used to wash and rinse pipeline: Wash _____ gal., Rinse _____ gal.

b. Frequency of pipeline washing _____ times per day.

c. Pipeline washing:

Number of washings with soapy water _____

Number of washings with disinfectant _____

Number of rinses with clean water _____

d. Stainless steel bulk milk storage tank(s) and capacity:

Number Of Tanks	Milk capacity in pounds or gallons
_____	_____or_____
_____	_____or_____

e. Bulk tank(s) washing:

Capacity of Tank in lbs. or Gallons	Gallons per wash Auto or Manual	Frequency of Bulk Milk Pickup and Tank Washing
_____or_____	_____or_____	_____
_____or_____	_____or_____	_____

f. Hand washing miscellaneous milking equipment usually in sink including rinse water _____ gallons/milking.

g. Washing milk room floors and walls, exterior of bulk tanks, loading slab, etc. _____ gallons/day or _____ inch nozzle diameter at _____ psi nozzle pressure; and _____ minutes washing time/day.

D-5. Estimating Effluent Volumes

Is sufficient information known to calculate (with reasonable accuracy) effluent volume produced?
_____Yes _____ No

If no, refer to Appendix: MEASURING EFFLUENT DISCHARGE FROM FACILITIES

D-6. Collection of Field Information for Site Plan

Collect information identified in *GENERAL Section G-8 and G-9* to prepare general and detail AFO facility sketches, site plans, maps, etc. Use NRCS-ENG 523a for recording details not shown on site plans.

SWINE

Site Visit Worksheet

Date: _____

Operation represented by: _____

NRCS represented by: _____

S-1. Confirm or modify general information: _____

_____

_____

_____

S-2. Farrowing Area:

a. Number of farrowing stalls or pens _____.

b. Average number of sows with/without piglets _____. Average sow weight _____lbs.

c. Average number of piglets less than 8-lbs. _____. Average piglet weight _____ lbs.

d. Detail cleaning with high pressure hose nozzle _____ gpm; or nozzle pressure _____ psi and nozzle size _____ inches; or hose valve (faucet) pressure _____ psi, hose length _____ feet, hose diameter _____ inches and nozzle size _____ inches.

e. Detail cleaning takes _____ minutes twice daily, daily, every other day, other _____.

f. General cleaning in farrowing area:

1. With high-pressure hose and nozzle _____ gal/minute for _____ minutes _____ per day, _____ every other day, other _____.

2. Hydraulic flushing alleys manual _____, automatic timer _____, 12 8 6 4 3 2 1 times daily. _____ not used.

a. Number of alleys flushed _____.

b. Volume per alley per flush _____ gal, or depth of flow _____ inches, for duration _____ minutes; average alley width _____, slope of alleys _____ ft/ft.

S-3. Nursery area

a. Average number of piglets less than 8-lbs. _____. Average piglet weight _____ lbs.

b. Detail cleaning with high pressure hose and nozzle _____ gpm; or nozzle pressure _____ and nozzle size _____ inches diameter; or hose valve (faucet) pressure _____ psi, hose length _____ feet, hose diameter _____ inches, and nozzle diameter _____ inches.

c. Detail cleaning with hose and nozzle takes _____ minutes 3 2 1 times daily.

S-4. Feeder area

a. Average number of weaner pigs 8-40 lbs _____. Average weaner pig weight _____ lbs.

b. Average number of feeders 40-125 lbs. _____. Average feeder pig weight ____ lbs.

c. Cleaning with high pressure hose and nozzle _____ gpm; or nozzle pressure _____ and nozzle size _____ inches diameter; or hose valve (faucet) pressure _____ psi, hose length _____ feet, hose diameter _____ inches, and nozzle diameter _____ inches. Other _____.

d. Cleaning takes _____ minutes ___ per day, ____ every other day, other _____.

e. Hydraulic alley flushing manual ____, automatic timer _____, 12 8 6 4 3 2 1 times daily, _____ every other day.

1. Number of alleys flushed per building _____. Number of buildings _____.

2. Volume/alley/flush _____ gallons, or depth of flow _____ inches, duration _____ minutes; average width of alley _____, slope of alley _____.

3. Other sources of waste water (e.g., pig waterers, faucets, hoses, evap coolers, etc.) _____ gal/min, or _____ gal./day.

S-5. Finishing area

a. Average number of finisher pigs 125-250 lbs. ____. Average finisher pig weight ____ lbs.

b. Open earth lot ____, or concrete slab or floor ____. *(If earth lot, go to FEED LOTS.)*

c. Cleaning with high pressure hose and nozzle _____ gpm; or nozzle pressure _____ and nozzle size _____ inches diameter; or hose valve (faucet) pressure _____ psi, hose length _____ feet, hose diameter _____ inches, and nozzle diameter _____ inches. Other _____.

d. Cleaning takes _____ minutes _____ per day, _____ every other day, _____ other _____.

e. Hydraulic alley flushing manual ____, automatic timer _____, 12 8 6 4 3 2 1 times daily, _____ every other day.

1. Number of alleys flushed per building _____. Number of buildings _____.

2. Volume/alley/flush _____ gallons, or depth of flow _____ inches, duration _____ minutes; average width of alley _____, slope of alley _____.

3. Does hydraulic flush operations use recycled water? YES _____ NO _____.

S-6. Gestation area

a. Number of sows _____, average sow weight _____ lbs.

b. Open earth lot _____ or concrete slab _____. *(If open earth lot, go to FEED LOT.)*

c. Cleaning with high-pressure hose and nozzle _____ gpm, or nozzle pressure _____ nozzle size _____ inches diameter.

d. Cleaning takes _____ minutes _____ per day, _____ every other day.

e. Hydraulic alley flushing manual _____ automatic timer _____ 12 8 6 4 3 2 1 times daily.

1. Number of alleys flushed per building _____. Number of buildings _____.

2. Volume/alley/flush _____ gallons, or depth of flow _____ inches, duration _____ minutes; average width of alley _____, slope of alley _____.

3. Does hydraulic flush operations use recycled water? YES _____ NO _____.

f. Other sources of waste water (e.g., leaky pig waterers, faucets, hoses, evap coolers, etc.) _____ gal/min, or _____ gal./day.

S-7. Boar area

a. Number of sows _____, average sow weight _____ lbs.

b. Open earth lot _____ or concrete slab _____. *(If open earth lot, go to FEED LOT.)*

c. Cleaning with high-pressure hose and nozzle _____ gpm, or nozzle pressure _____ nozzle size _____ inches diameter.

d. Cleaning takes _____ minutes _____ per day, _____ every other day.

e. Hydraulic alley flushing manual _____ automatic timer _____ 12 8 6 4 3 2 1 times daily.

1. Number of alleys flushed per building _____. Number of buildings _____.

2. Volume/alley/flush _____ gallons, or depth of flow _____ inches, duration _____ minutes; average width of alley _____, slope of alley _____.

3. Does hydraulic flush operations use recycled water? YES _____ NO _____.

f. Other sources of waste water (e.g., leaky pig waterers, faucets, hoses, evap coolers, etc.) _____ gal/min, or _____ gal/day.

Date: _____

FEED LOTS

(All livestock including poultry)

Site Visit Worksheet

F-1 Feed lot area

a. Number, kind, and average weight of livestock:

_____	Diary calves	_____	lbs.	_____	Swine sows	_____	lbs.
_____	Diary heifers	_____	lbs.	_____	Swine boars	_____	lbs.
_____	Dairy cows	_____	lbs.	_____	Swine finishers	_____	lbs.
_____	Beef calves	_____	lbs.	_____	Lambs	_____	lbs.
_____	Beef feeders	_____	lbs.	_____	Sheep	_____	lbs.
_____	Horses	_____	lbs.	_____	Turkey broilers	_____	lbs.
_____	_____	_____	lbs.	_____	_____	_____	lbs.

b. Feedlot surface area _____ acres.

c. Surface drainage direction & slope _____.

d. Are concrete pads installed on the livestock of feeders or managers? Yes ____ No ____.
If yes, what is the number, length, and width of each size pad? _____
Is the area included in b above? Yes _____ No _____

e. Percent (or area in acres) and type of feed lot surface: concrete __, asphalt __, earth ___.

f. Occupation period(s) ___ all months of year or _____ _____ to _____ _____.
(month) (day) (month) (day)

g. Is unpolluted storm runoff up to the 25 year-24 hour event excluded from the feedlot by dikes, ditches, natural slope, or other physical barrier? Yes _____ No _____.

If no, what is the additional watershed area _____ acres, watershed soil(s) _____, watershed cover _____?

h. Total watershed area contributing to polluted runoff is _____ acres.

i. Is surface drainage from feed lot areas controlled? Yes _____ No _____. If yes, how? Waterways _____, ditches _____, dikes _____, berms _____, storage pond or lagoon _____.

j. Solid waste from feedlots is removed continuously? _____, monthly _____, bi-monthly _____, semi-annually _____, at least annually _____.

k. Are the feed lanes flushed? All lanes _____ or some lanes _____? If yes, gallons per flush _____ gal. Number of flushes per day _____. Is the flush water fresh _____, wastewater from milking area _____, or wastewater from storage pond _____?

Date: _____

SOLID WASTE COLLECTION AND STORAGE

(all livestock including poultry)

Site Visit Worksheet

W-1. Solid Waste Storage Facilities

a. Are solid waste collection and storage areas considered part of the feed lot surface? Yes _____ No _____. *(If yes, go to EFFLUENT COLLECTION AND STORAGE.)*

b. Dimensions of existing solid waste storage area _____. Proposed _____. Length _____ ft., width _____ ft., or describe _____ _____.

c. Is unpolluted storm runoff up to the 25 year-24 hour event excluded from the feedlot by dikes, ditches, natural slope, or other physical barrier? Yes _____ No _____.

If no, what is the additional watershed area _____ acres, watershed soil(s) _____, watershed cover _____?

d. Is surface drainage from the solid waste storage area controlled? Yes _____ No _____. If yes, how? _____ _____

e. Solid waste is removed continuously _____, monthly _____, bi-monthly _____, semi-annually _____, at least annually _____.

f. Solids are ultimately disposed by spreading on irrigated cropland ___, off farm sales ____, fed to livestock ____.

Date: _____

EFFLUENT COLLECTION AND STORAGE

(all livestock including poultry)

Site Visit Worksheet

Effluent (liquid waste) from AFOs includes: animal urine, facility wash water, processing water, feed lot and solid waste storage area runoff. This section applies to the collection and storage of effluent outside of buildings. Effluent may contain up to 4% solids.

E-1. Effluent collection facilities

a. Effluent exits buildings in _____ ft. open ditch, _____ ft. of _____ diameter pipeline. Is a manifold configuration used? Yes _____ No _____. If Yes, use sketch to show layout, sizes and lengths.

b. Is a temporary storage sump and pump used? Yes ____ No_____ *(If No, proceed to Section E-1(d); if Yes, see below.)*

1. Sump dimensions are ____ ft. length and ____ ft. width, or ____ ft. diameter. Sump is constructed of _____.
2. Minimum effluent surface is ____ ft. below top of sump.
3. Maximum effluent surface is ____ ft. below top of sump.
4. Sump pump specs: Motor horsepower _____, make _____, model number _____. Effluent discharge elevation is _____ ft. above the lowest effluent surface in the sump.

c. Average time sump pump runs per cycle is _____ minutes.

d. Existing effluent discharges via _____ ft. open ditch, _____ ft. of _____ inch diameter pipeline, _____ ft. of _____ inch diameter pipeline and separating screen, wild flooding _____, other _____.

E-2. Effluent storage facilities (does not include sump and pump facilities in Section E-1.)

a. Storage facilities contain effluent: less than 30 days _____, more than 30 days, but less than 12 months _____, year round _____.

b. Normal depth of effluent storage is 0-3 ft. (aerobic), 3-5 ft. _____ (aerobic and mixed), more than 5 ft. _____ (aerobic, mixed and anaerobic).

c. Dimensions of concrete storage tank(s) if used:

Length (ft.)	Width (ft.)	Diameter (ft.)	Depth (ft.)
_____	_____	_____	_____
_____	_____	_____	_____

d. Method of construction, age, and size of earth storage pond(s) or lagoon(s): Method of construction: excavated _____, excavated and embankment _____, embankment only _____. Year of construction _____.

Length (ft.)	Width (ft.)	Diameter (ft.)	Depth (ft.)
_____	_____	_____	_____
_____	_____	_____	_____

e. Ultimate disposal of effluent is:

1. Retention on feed lot surface and evaporated _____.
2. Stored in a sealed holding pond that may be dry part of the year _____, and
3. Stored in a sealed year-round pond or lagoon containing at least 24" of effluent any given month of the year, and applied on irrigated cropland with IWM _____ or evaporated _____.
4. Other (describe):
_____
_____
_____

f. Is solid separation used? Screen _____ basin _____ or other _____

1. If screen, manufacturer _____ model # _____ size _____ capacity _____ gpm. Size of solids storage area _____. How often cleaned? _____
2. If basin, type of construction: concrete _____. Block _____, other _____. Size of cells _____. Number of cells _____. Depth of cells _____. Is drying pad used? Yes _____ No _____. Type of drying pad _____. Size of drying pad _____. How often are the cells cleaned? _____

GENERAL

APPENDIX

G-1 Type of operation - e.g., Holstein Diary, beef feed lot, veal calf, farrow to finish swine, finisher swine, chicken broiler, chicken layer, turkey broiler, etc.

G-2 Size of operation – e.g., 800 cow-dairy, 12,500 beef feeder, 300 sows, 100,000 laying hens, etc.

G-3 Changes proposed - e.g., expansion to XXXX within five years, abandon facilities by year 2000, install liquid/solid separator screen, expand storage ponds, expand lagoons, etc.

G-4 Location of AFO:

General description - e.g., NE corner of Southern Avenue and Palo Verde Road, approximately 5 3/4 miles west by northwest of Buckeye, Arizona. i.e., Six miles southeast of Buckeye, Arizona on the west side of Airport Road, 4 miles south of Highway AZ 85.

Legal description - e.g., SW 1/4 of the SW 1/4 Section 28, Township I North, Range 4 west of the Gila-Salt River Meridian. e.g., E 1/2 of the E 1/2 Section 25, Township 1 S, Range 3 W of the Gila-Salt River Meridian.

G-5 Problems: Problems may be perceived (suspect but no proof) or identified (usually visually) by the owner, manager, ADEQ, NRCS, neighbor, passer by etc. Check whether perceived or identified by whom, and briefly state the problem. It is important that all problems, known or perceived, be considered early in the planning process. Redesign and construction delays result when new problems are discovered in an untimely manner. Who perceived or identified a problem indicates who is concerned (operator or public) and perhaps a time frame to correct the situation. This section is a recognition by the owner/manager that changes need to be made to meet personal and/or environmental goals.

G-6 Opportunities: Typically, at least one solution is known for every problem. Check whether a perceived or identified solution is known at this time. Whether or not it is the best or most feasible solution can only be determined by the planning process for a Waste Management System. Associated effects (soil, plants, air, water quality, etc.) often are not addressed. This section identifies solutions already under consideration by the owner/manager, NRCS, or others.

G-7. Approval to be per National Engineering Manual (NEM) and Arizona Planning Policy for AFO.

G-8 Existing and Proposed Site Plan: During the site visit, identify suggested items so they may be placed on a site plan prepared in the office.

a. Prepare reproducible approximate scale maps, drawings, and sketches on 8 1/2 x 11 or 11 x 17-inch paper for the design report or agricultural waste management plan. Construction drawings require more detail. Blank soil survey aerial photo maps work well where available.

b. Using drawings or sketches, 1" = 100' or larger, and 8 1/2 x 11 or 11 x 17 inch paper, show a detailed layout of buildings, pipelines, wells, corrals, waste storage areas, pumps, sumps, and other facilities.

c. Use additional data sheets on NRCS-ENG-523a computation paper as needed to clearly display information,(e.g., pump data, dimensions of buildings, holding areas, sumps, pipelines, etc.).

d. Use dashed lines or other suitable symbols to show proposed facility changes, modifications, or new construction.

G-9 Surveys needed: This section identifies field surveys needed so they may be accomplished during the visit or at a later time. It is preferred that future appointments be set prior to leaving the site.

DAIRY

APPENDIX

D-1 Confirm or modify general information - often times new information becomes available between the time general information and site information are collected. Also, planning changes may result from discussions and site reassessment. Change information on the GENERAL worksheet to reflect current thinking and make note of changes in this section.

D-2 Cow holding area - the area where groups of cows are held preparatory to entering the milking parlor. Typically, udders, legs, and the underside of cows are washed using impact, rotary, or spray floor sprinklers. The number of cycles and operating time per cycle sprinklers are used for each group of cows varies from dairy to dairy. Control may be manual or by using a preset timer. All wastewater volumes eventually need to be expressed in gallons/day, so multiple sources can be added for, a total waste volume.

a. The average number of cows in a group is used to calculate the amount of wastewater used in the holding area. Cows per group vary from 40 - 100 depending on the size of the milking parlor. Breed will be: Holstein, Guernsey, Jersey, Ayrshire, etc.

b. The average weight of cows being milked is used to estimate the amount of feces and urine deposited in the holding and milk parlor areas.

Typical weights are:	Holstein 1400 pounds
	Guernsey 1100 pounds
	Jersey 1000 pounds
	Ayrshire 1200 pounds

c. The number of groups milked each milking times the average number of cows per group, will be approximately equal to the total cows being milked. Newly freshened cows (cows having calves within the past ten days) are milked last.

d. The average time cows are held in the holding area indicates the amount of feces and urine deposited in the holding area. Total confinement time in the milking area will be used to calculate the percent of daily urine and feces to be handled by the waste disposal system.

e. The size of a holding area helps identify one dairy from another and provides a check on the number of floor sprinklers. Width is used when designing or evaluating hydraulic flush floor cleaning systems.

f. All holding area floors have some slope for surface drainage. If hydraulic flush floor cleaning is used slope may control depth of flow.

g. Floor sprinklers for washing cow udders, legs, etc.

1. Use number of floor sprinklers, capacity per sprinkler and total time of operation to determine volume of wash water in the holding area. WASH WATER VOLUME IN THE HOLDING AREA CONTROLS MOST DESIGNS.

2. See 1 above.

3. See 1 above.

h. Evaporative cooling mister nozzles

1. Many Arizona dairies use overhead mister nozzles to assist cow cooling in the holding area. Capacities vary from 2-4 gallons per hour with 10-30% of the water reaching the floor. Typically, mister nozzles are operated daylight hours in summer months. Convert water reaching the floor to gallons/day.

2. See 1 above.

3. See 1 above.
4. See 1 above.
5. See 1 above.

i. Cow holding areas may be cleaned one, two, or with three milkings, three times a day. Some dairy operations detail clean once each day with a more general cleaning between other milkings. Typically a 50 ft. hose and a 1/2 or 3/4 inch nozzle is used, with cleaning time varying from 10-30 minutes each cleaning.

Water used for cleaning holding areas may be estimated by multiplying a known flow rate time.

To determine flow rate:
--time how long it takes to fill a five gallon bucket,
--calculate discharge knowing nozzle pressure and nozzle size,
--use the following table knowing dynamic line pressure available at the hose valve or faucet, hose diameter, and nozzle size. Interpret table values for hose lengths other than 50 foot and nozzle pressures different from 40 and 55 psi.

ESTIMATING HOSE AND NOZZLE CAPACITY

AND VELOCITY

		Pressure Available To Hose 2/			
		40 psi		55 psi	
Hose Inside Diameter (in.) 1/	Nozzle Inside Diameter (in.)	Capacity gal/min	Velocity ft/sec	Capacity gal/min	Velocity ft/sec
5/8”	¼”	10	64	12	77
	3/8”	16	46	18	52
¾”	3/8”	20	58	25	73
	½”	30	48	35	56
1”	3/8”	25	72	30	87
	½”	40	64	45	72
1 ¼”	½”	45	72	50	80
	¾”	70	51	80	58
1 ½”	½’	45	72	50	80
	¾”	80	58	95	69
2”	¾”	80	58	95	69
	1”	100	41	125	51

1/ 50 foot length

2/ Hose valve or faucet pressure with water flowing

D-3. Milking Parlor

a. Examples of size and configuration of a milking parlor are: Double 24 Parallel (Total 48 Stalls)

Double 16 Herringbone (Total 32 Stalls)

Double 8 Side Opener (Total 16 Stalls)

40 Stall Polygon (Total 40 Stalls)

30 Stall Trigon (Total 30 Stalls)

Herringbone - cows stand with hindquarters and udders facing milker. If feed is provided, feeders are on the outside. Cows enter and exit in groups. Layout may be long and narrow or diamond shaped. This configuration is by far the most popular.

Parallel - cows stand perpendicular to milkers side by side, milking cups are attached to udders between the hind legs. Layout may be long and narrow or diamond shaped. New and remodeled milking parlors use this configuration to milk more cows in a given area.

Side Opener -cows stand head to tail parallel with the milking pit area. Cow access is through a side-opening gate. A moving carousel may be used to expand the number of cows being milked. Side opener stalls were popular in the 50's and 60's.

Trigon - cows stand perpendicular or herringbone style along a three sided milking area. Many new milking parlors use this configuration.

Polygon - cows stand perpendicular or herringbone style along a five sided milking area. Many new milking parlors use this configuration.

b. Milkings per day - many Arizona dairy operations milk two times per day throughout the year. Others milk two times per day during summer months, and three times per day fall, winter, and spring; increasing the time cows are in the holding and milk parlor areas.

c. The average time cows stay in the milk parlor area contributes to the amount of feces and urine deposited in the milk parlor. Total time (holding and milking) will vary between 45 minutes and 80 minutes per milking for most dairies.

d. Many dairies detail wash teat and udder areas with warm water and paper towel dry before milking cups are connected. Water use varies from selected spot cleaning 1-3 gallons/cow/day to as high as 45 or 50 gallons/cow/day where each piece of feces or spilled feed is chased to a drain. In both cases, the floor and external surfaces of milking equipment are kept clean.

e. Milking parlors are cleaned one, two, or with three milkings per day, three times each day. Some dairy operations detail clean once each day with a more general cleaning between other milkings. Typically a 50 ft. hose and a 1/2-in. nozzle is used, with cleaning time varying from 10-30 minutes each cleaning.

f. Water used for cleaning the milking parlor may be estimated by multiplying time by a known flow rate. To determine flow rate: time how long it takes to fill a five gallon bucket or calculate discharge knowing nozzle pressure and nozzle size. If the latter method is used, be sure to measure nozzle pressure, not line pressure. Nozzle pressure can be measured using a pilot tube and gauge. Hose and nozzle discharge may be estimated using the above table and pressure at the hose valve (faucet) with water flowing.

D-4. Milkroom Equipment, Bulk Tank, and Pipeline Cleaning

a. Stainless steel or glass lined steel pipelines carry milk from each milking position direct to the bulk tank for cooling and storage. Pipelines are cleaned following each milking, using soapy water, disinfectant and clear water rinses. Calculate the volume of water held in pipelines, multiply by the number of washes and rinses, then add 10 to 20% for flow through (changing from one cycle to another).

b. See a above.

c. See a above.

d. Bulk tanks are sized by the pounds of milk (8 ½ lbs./gal.) or by the gallons of milk they hold. Stainless steel bulk storage tanks cool and store milk until it can be picked up by semi truck for transport to a milk processing facility.

e. Milk pickup may be daily, every day and a half, or every other day. Following milk pickup, bulk tank(s) are cleaned using soapy water, water with disinfectant, and clear water. Washing is generally automated but may be done manually.

Bulk Tanks	Total Gallons
Automatic, 3-cycle wash	50-110

Show capacity of tank(s) and unit of measure, total gallons of water used, and frequency of bulk milk pickup or tank washing.

f. Miscellaneous milking equipment is hand washed in a sink after every milking. Water used will be about 25-50 gallons per milking.

g. Milk room walls and floor, bulk tank exterior surfaces, and outside loading slab cleaning usually takes place once each day, or following each milk pickup. Measure or calculate volume of wash water used. Express amount in gallons per day.

D-5. Estimating Effluent Volume

Self-explanatory.

D-6. Collection of Field Information for Site Plan

Refer to *GENERAL Sections G-8 and G-9* for information needed when preparing general and detail AFO facility site plans. Use NRCS-522 or NRCS-523 sheets for recording information inconvenient to show on a site plan.

SWINE

APPENDIX

S-1 . Confirm or Modify General Information - New information often becomes available between the time general information and more site-specific information are collected. Planning changes may result from discussions and site reassessment. Change information on the general worksheet to reflect current thinking and make note of changes in this section.

S-2. Furrowing areas are compartmentalized metal or wood stalls or pens often with wood floors where sows have their litters. Typically the sow has access to only one half of the 35 - 65 square foot area. Heat lamps are used to warm piglets during cool months. BE ESPECIALLY QUIET WHEN ENTERING THIS AREA.

a. - c. Used to determine amount of feces and urine deposited in farrowing area

d. - f. Determine flow rate by the time required to fill a five gallon bucket or measure nozzle pressure and diameter, or use hose and nozzle capacity table in the dairy appendix. In section e. and f. circle, cross out, or check the appropriate time period and number of times per day alleys are flushed. Recycled water should not be used in the farrowing and nursery areas.

S-3. Nursery areas are perhaps the cleanest of furrow to finish areas. Fill in the blanks and circle the number of times daily cleaning takes place.

S-4. Feeder areas may contain weaner pigs and feeders. Weaners and feeders are usually separated from finishers due to difference in feed ration.

S-5. Finishing areas in Arizona are typically open sided buildings with concrete floors and flush alleys. Some swine producers use open feed lot or field grazing.

S-6. Gestation area may be within a building with a concrete floor, an open shelter and concrete slab, or entirely open feed lot. Pregnant sows are separated into small groups to reduce fighting and for management purposes.

S-7. Boar-areas in Arizona are typically individual pens on open earth feedlots. An open sided building provides shade and shelter. If sows are brought to the boars for breeding, boar feces and urine contributes very little, if any to the waste management system. Polluted feed lot runoff must be controlled and disposed of properly.

FEED LOT

APPENDIX

Feed lots are used for many purposes and for all types of livestock (including poultry). In all cases the soil surface is absent of vegetation. Soil surface compaction and a biological seal 14-18" below the soil surface develops to limit the movement of polluted water downward. Polluted surface runoff resulting from precipitation up to the 25 year - 24 hour event should be controlled and disposed of properly. When estimating runoff use curve number 97 for concrete or asphalt areas, and curve number 90 for earth feed lots.

Minimize polluted water volumes by excluding irrigation tailwater and clean surface runoff from entering feed lot areas. Wide low elevation dikes or berms and wide shallow waterways can be very effective. Often times the same area can contain sight and sound barrier plantings and/or roadways. Safe disposal of diverted or intercepted water is essential.

When removing dry manure from feed lot surfaces, leave 1/2 to 1 inch of dry manure to minimize disturbing the highly organic compacted earth surface seal. Coupled with a biological seal that develops under anaerobic conditions under feed lots 14 - 18" below the surface, downward movement of polluted effluent is virtually eliminated.

Uncontrolled polluted surface runoff from feed lots can be a prime source of ground water nitrates. Collection and storage facilities should be designed, constructed and operated in a manner to minimize seepage. Store polluted runoff in or on sealed areas only. Disposal should be by irrigation with IWM or evaporation. Temporary storage on lower elevation feed lot areas using wide low elevation berms or dikes may be most economical.

F-1. Feed Lot Area

a. Number, kind, and weight of livestock controls the amount of feces and urine deposited on the feed lot area.

b. Feed lot area is used to calculate polluted surface runoff.

c. Record or show on sketch feed lot surface drainage direction and slope in ft/ft or ft per 100 ft (%).

d. Some feed lots have concrete or asphalt pads in front of feed managers to improve livestock traffic ability and save feed. If so, surface runoff will be slightly higher. Use runoff curve Number 90 for unsurfaced areas and runoff Curve Number 97 for surfaced area.

e. Use percent concrete plus asphalt and percent earth to establish a weighted curve number for estimating feed lot runoff.

f. Occupation period is used to estimate feces and urine deposited on the feed lot area.

g. Non diverted clean water becomes polluted upon entering feed lot areas. To minimize the amount of polluted runoff to be handled use dikes, berms, ditches, waterways and natural slope to intercept and divert clean runoff. Minimum design capacity of polluted and clean runoff facilities (ditches, dikes, storage ponds, etc.) is runoff expected from 25 year - 24 hour storm event.

h. Total watershed area contributing to polluted runoff is the sum of item (b.) and (g.) above.

i. Feed lot surface drainage is controlled only if collection, transport, and storage facilities are confined and include seepage control.

j. Solid waste in feed lot areas should be removed at least annually. Livestock health and fire may be the biggest hazard.

k. Some feed alleys are flushed with water to clean them instead of mechanical scraping. Usually the water used is wastewater.

SOLID WASTE COLLECTION AND STORAGE

APPENDIX

W-1. Solid waste collection and storage facilities consist of conveyance and storage facilities having sealed surface areas where polluted runoff is controlled. Solids consisting of livestock manure, wasted feed, urine, and bedding (if used) may contain up to 85% moisture, and be handled with normal front loading equipment. Angle of repose for dry stacked solids may vary from 1:1 to 1½ :1 (horizontal : vertical). Wet solids and slurries may be as flat as 10:1. Rapid surface drying minimizes fly propagation.

a. Environmentally, feed lot areas are best for solid storage. Downward water movement is limited and polluted surface runoff can be included with feed lot runoff facilities. Maximum drying and nitrogen reduction may also take place. Fly propagation is minimized. Polluted runoff collection facilities may consist of broad low elevation dikes or berms and broad shallow waterways, a part of the feedlot surface.

b. Solid waste storage areas should be a defined area constructed to minimize environmental degradation.

c. National criteria (EPA and NRCS) require clean and polluted water (effluent) runoff facilities be designed and constructed to control runoff expected from at least a 25 year - 24 hour storm event. (Runoff events with equal or greater than a 4% chance of occurrence in any given year). In most cases it is highly cost effective to exclude clean water from entering a waste management area where it too becomes polluted. Use runoff Curve Number 90 for unsurfaced areas and runoff Curve Number 97 for surfaced feedlot areas.

d. Surface drainage facilities consist of grading surface areas and using ditches, dikes or berms, waterways, pipelines, sumps, etc. to collect, confine and dispose polluted surface runoff.

e. Solid wastes should be removed at least annually to minimize dust, fire, and livestock health problems. SOLID WASTE IS A RESOURCE and maybe used as a soil amendment or fertilizer. With management, screened solids may be feed to other livestock.

f. When removing solid wastes leave 1/2 to 1 inch of waste on the surface of earth lots to avoid disturbing the high organic compacted earth seal that develops at the soil surface. This surface seal coupled with the biological seal that develops under anaerobic condition 14-18" below the surface, virtually eliminates downward movement of polluted water.

EFFLUENT COLLECTION AND STORAGE

(All Livestock Including Poultry)

APPENDIX

Effluent liquids containing up to 4% solids and slurries containing 4-15% solids, result from many confined animal (and poultry) feeding operations (AFO's). Environmentally sound collection, transport, storage, and disposal of effluent (liquid waste) are essential to minimize ground water nitrate loading, odor, and flies. EFFLUENT IS A RESOURCE consisting of water, nutrients, and organic matter; all valuable commodities in Arizona.

E-1. Effluent Collection Facilities

a. Record total length of ditch or pipeline. If manifold, show layout with length and sizes on sketch. Control of effluent begins at the source.

b. Often times a concrete sump or tank is used to collect and store effluent for subsequent pumping to a higher or distant point. By knowing the sump dimensions and the difference between maximum and minimum water surface, the volume pumped per cycle is known. Pump information recorded can be used to obtain a Pump Characteristic Curve or table from the dealer or manufacturer, identifying the operation characteristics (head/capacity) of the pump in use.

c. By knowing the average time to pump the volume of water in b. l. through b.3., a pumping rate can be calculated. Total pumping time per day times this rate will measure effluent discharge. Use a dial type electric clock or AC hour meter wired to the motor or switch side of the electrical circuit to record pumping time for a 7-10 day period; average to the nearest two hour period (0.1 day) for a daily effluent yield.

d. Identify how effluent presently moves from collection to storage.

E-2. Effluent Storage Facilities

a. To create an organic and/or biological seal at and below the soil surface, depth of effluent should be at least two feet. Thus pond liners (i.e., compacted silty clay loam or clay loam blankets or impermeable membranes) should be considered where storage facilities may dry between use cycles. Temporary effluent storage on feed lot surfaces are an exception.

b. This entry is intended to identify the principle type of bacteria involved in the digestion process. Aerobic bacteria use oxygen while anaerobic bacterial activity is reduced in the presence of oxygen. A properly designed and operated aerobic lagoon is odorless. A properly designed and operated anerobic lagoon will usually have some odor but not be objectionable most of the year. All lagoons (or ponds) are aerobic in the top 0-3 feet. Rapid change in effluent depth release the most odor.

c. Some facilities have existing concrete storage tanks. Except for fluctuating water surfaces and very sandy soils, large concrete storage tanks are usually not necessary. Arizona AFOs are large, thus reducing tank storage time to just a few days. A large, open, less than 4 ft. deep concrete tank may be a source of aerobic effluent for hydraulic floor and alley flush system water. With proper design, aerobic water can be pumped from a pond or lagoon surface.

d. The method of earth construction, date of construction, and size are indicative of structure stability. Size is used to calculate surface area for evaporation and precipitation; and volume for biological oxygen demand loading rate, and annual storage. Occasionally ponds and lagoons are not geometrical. Record size in narrative or show on sketch.

e. To complete the RMS, disposal of effluent must be considered. In Arizona, the three listed methods of disposal are the only accepted alternatives.

f. Most dairies use solid separation to remove some of the solid waste from the wastewater coming from the milk parlor/holding area. The solids are usually applied with the solids scraped from the feed lots.

MEASURING EFFLUENT DISCHARGE FROM FACILITIES

APPENDIX

A. Continuous Discharge: Continuous and steady effluent discharge rates may be measured:

1. In open channels or partially filled pipelines by:
   a. Modified Broadcrested Weir (Replogle) measuring flume or other appropriate flow-measuring device.
   b. Five gallon bucket (or other know capacity container) and watch.
2. In full pipe flow by:
   a. Orifice Plates
   b. Venturi flow meters.
   c. Sonic flow meters.

B. Intermittent Discharge

Intermittent or cyclic discharge measurements are a combination of volume and frequency; or flow rate, time, and frequency.

1. Measuring volume for intermittent discharge:
   a. Measure receiving sump length and width or diameter and multiply by the change in water surface (maximum minus minimum water surface elevation).
   b. If the sump is irregular in shape, average maximum and minimum water surface areas and multiply by the change in water surface elevation.
2. Measuring frequency for intermittent discharge:
   a. Often the manager has an estimate of frequency (i.e., how many cycles occur while cleaning, such as average two cycles every three hours, etc.).
   b. Frequency may be calculated using total pump operation time per day divided by the time it takes to pump effluent each cycle.
3. Flow rate for each cycle can be measured in open channels or partially filled pipelines by:
   a. Modified Broadcrested weir (Replogle) measuring flume or other appropriate flow measuring devices.
   b. Five gallon bucket (or other known capacity container) and watch.
   c. Portable flow measuring devices (i.e., sparling flow meters, or face plates, or current meter).
   d. If the discharge flow rate can not be measured, a discharge estimate can be made using pump characteristic curves and Total Dynamic Head (TDH). Pump operational characteristics (or performance) is shown by curves or tables prepared by the manufacturer. Pump make, model number, kind or type, shaft rpm, and impeller diameter create a head/discharge relationship characteristic of only one pump. Thus by calculating TDH, including pump friction loss, pump/system discharge may be known. Request pump characteristic curves or tables from the pump dealer or manufacturer.
4. Pump time can be measured using a dial type electric clock or AC hour meter wired into the switch side of the pump motor electric circuit. When the pump motor runs, the clock runs. Measure operation for a 7-10 day period, then average for daily operation time. A QUALIFIED PERSON MUST MAKE ALL ELECTRIC CONNECTIONS.
5. A less accurate, but conservative, method to estimate effluent discharge from facilities is to estimate the volume of water pumped by the supply well(s). Some AFO facilities have a flow meter on the water supply.

Knowing the supply pump kind, make, model number, number of impellers, impeller diameter, shaft rpm and Total Dynamic Head (THD); supply pump discharge may be estimated. Discharge rate times the hours per day pump operation gives a gross volume of water used. A dial-type electric clock, AC hour meter, or a separate electric kilowatt-hour meter may be used to estimate time of pump operation. Take measurements for 7-10 days to calculate a reasonable daily average.

Using nameplate pump discharge is not recommended. Water table elevation, plumbing to and from the pump, and impeller wear are variables affecting pump discharge.

Deduct water lost by evaporation and non-AFO uses (i.e., domestic use, landscape irrigation, etc.). Deduct livestock drinking water if total manure (feces and urine) production is estimated.

COMPUTATION SHEET
NRCS-ENG-523a Rev. 6-01

U.S. DEPARTMENT OF AGRICULTURE
NATURAL RESOURCES CONSERVATION SERVICE

ARIZONA	***PROJECT*** La Grande Merd Dairy		***JOB #*** CNMP-1
BY	***DATE*** 6/27/01	***CHECKEDY BY***	***DATE***
SUBJECT 25yr-24hr Storm Event Calculation			***SHEET 1 OF 1***

Calculate facility "run off" to the waste storage lagoon based on a 25yr-24hr storm event.

The isopluvial map can be found on the internet or in the NOAA Atlas

Runoff depth is found in the Technical Release 55 on P. 2-3, Table 2-1

Given: From the 25yr-24hr isopluvial map, 3.0" will fall

If the runoff curve CN = 90 then the runoff depth is 1.98 inches

The dairy and surrounding storage area totals 35.57 acres.

$\mathbf{V_{runoff}}$ = storage area in acres * runoff depth in inches

= (35.57 acres) (1.98 inches)
= 70.42 acre-inches or 5.86 acre-feet

If the runoff curve CN = 95 then the runoff depth is 2.45 inches

$\mathbf{V_{runoff}}$ = (35.57 inches) (2.45 inches)
= 87.14 acre-inces or 7.26 acre-feet

Due to the hardness of artificial (pavement and concrete) and natural surfaces use a higher curve number when calculating run off from storm events.

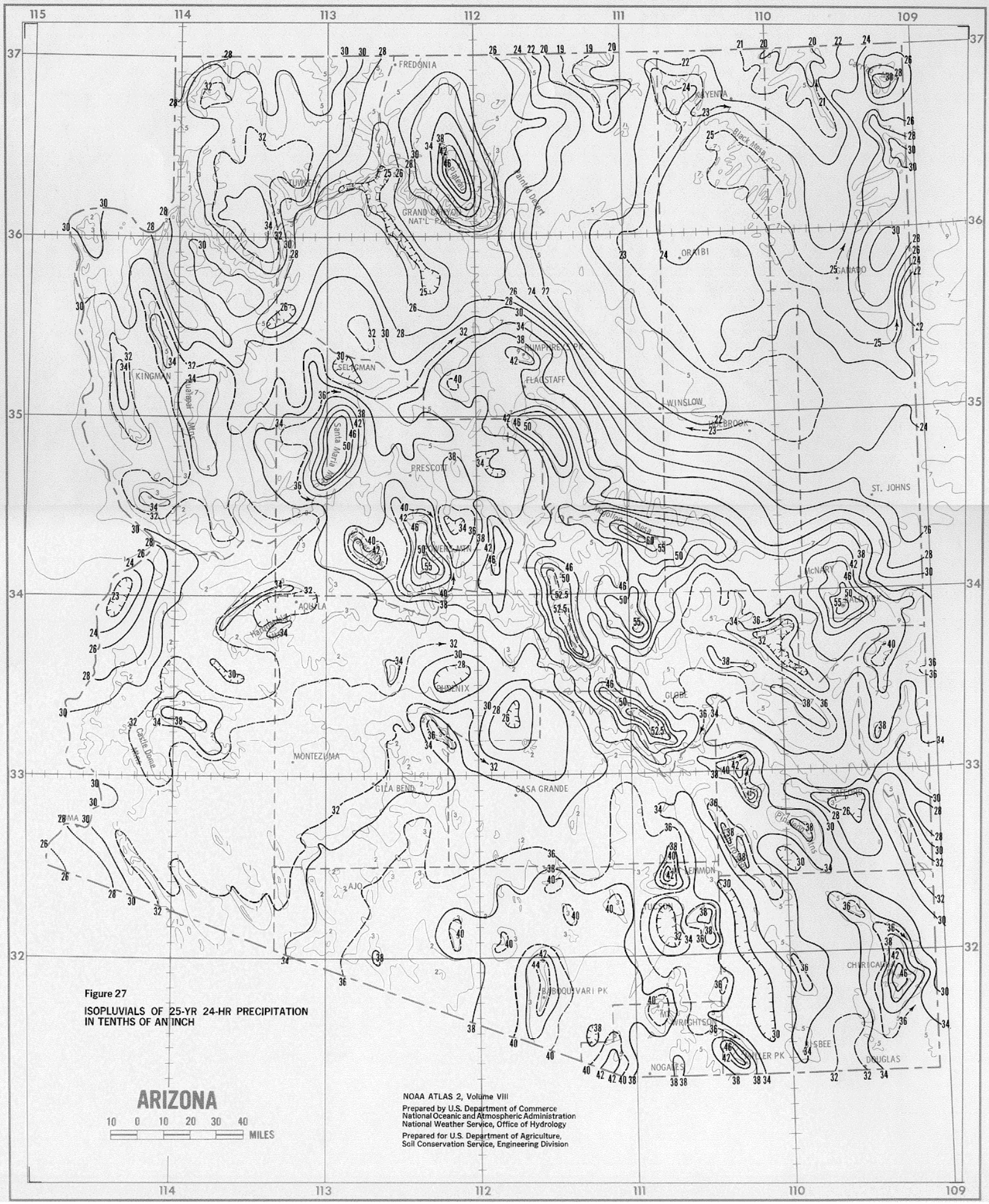

Figure 27

ISOPLUVIALS OF 25-YR 24-HR PRECIPITATION IN TENTHS OF AN INCH

ARIZONA

10 0 10 20 30 40 MILES

NOAA ATLAS 2, Volume VIII

Prepared by U.S. Department of Commerce
National Oceanic and Atmospheric Administration
National Weather Service, Office of Hydrology

Prepared for U.S. Department of Agriculture,
Soil Conservation Service, Engineering Division

Table 2-1 Runoff depth for selected CN's and rainfall amounts [1/]

Rainfall	Runoff depth for curve number of—												
	40	45	50	55	60	65	70	75	80	85	90	95	98
	inches												
1.0	0.00	0.00	0.00	0.00	0.00	0.00	0.00	0.03	0.08	0.17	0.32	0.56	0.79
1.2	.00	.00	.00	.00	.00	.00	.03	.07	.15	.27	.46	.74	.99
1.4	.00	.00	.00	.00	.00	.02	.06	.13	.24	.39	.61	.92	1.18
1.6	.00	.00	.00	.00	.01	.05	.11	.20	.34	.52	.76	1.11	1.38
1.8	.00	.00	.00	.00	.03	.09	.17	.29	.44	.65	.93	1.29	1.58
2.0	.00	.00	.00	.02	.06	.14	.24	.38	.56	.80	1.09	1.48	1.77
2.5	.00	.00	.02	.08	.17	.30	.46	.65	.89	1.18	1.53	1.96	2.27
3.0	.00	.02	.09	.19	.33	.51	.71	.96	1.25	1.59	1.98	2.45	2.77
3.5	.02	.08	.20	.35	.53	.75	1.01	1.30	1.64	2.02	2.45	2.94	3.27
4.0	.06	.18	.33	.53	.76	1.03	1.33	1.67	2.04	2.46	2.92	3.43	3.77
4.5	.14	.30	.50	.74	1.02	1.33	1.67	2.05	2.46	2.91	3.40	3.92	4.26
5.0	.24	.44	.69	.98	1.30	1.65	2.04	2.45	2.89	3.37	3.88	4.42	4.76
6.0	.50	.80	1.14	1.52	1.92	2.35	2.81	3.28	3.78	4.30	4.85	5.41	5.76
7.0	.84	1.24	1.68	2.12	2.60	3.10	3.62	4.15	4.69	5.25	5.82	6.41	6.76
8.0	1.25	1.74	2.25	2.78	3.33	3.89	4.46	5.04	5.63	6.21	6.81	7.40	7.76
9.0	1.71	2.29	2.88	3.49	4.10	4.72	5.33	5.95	6.57	7.18	7.79	8.40	8.76
10.0	2.23	2.89	3.56	4.23	4.90	5.56	6.22	6.88	7.52	8.16	8.78	9.40	9.76
11.0	2.78	3.52	4.26	5.00	5.72	6.43	7.13	7.81	8.48	9.13	9.77	10.39	10.76
12.0	3.38	4.19	5.00	5.79	6.56	7.32	8.05	8.76	9.45	10.11	10.76	11.39	11.76
13.0	4.00	4.89	5.76	6.61	7.42	8.21	8.98	9.71	10.42	11.10	11.76	12.39	12.76
14.0	4.65	5.62	6.55	7.44	8.30	9.12	9.91	10.67	11.39	12.08	12.75	13.39	13.76
15.0	5.33	6.36	7.35	8.29	9.19	10.04	10.85	11.63	12.37	13.07	13.74	14.39	14.76

[1/] Interpolate the values shown to obtain runoff depths for CN's or rainfall amounts not shown.

SOIL FERTILITY REPORT

SUBMITTED BY Le Grand Merd Dairy
ADDRESS 123556 Many Farms Rd
Where Are We Az 88888

GROWER
LAB NUMBER
SAMPLE NUMBER

SAMPLE MARKING	Field # 1, Sample #2	CROP	Oats	DATE RECEIVED	4/18/00
		YIELD GOAL	3200	DATE REPORTED	5/2/00

Lab Tests	Result	Level	Suggested Recommendations
pH, S.U.	7.4		
ELECTRICAL CONDUCTIVITY, mmhos/CM		VL	
FREE LIME, --	YES		
ORGANIC MATTER, %	1.5		
NITRATE-N, PPM	9		
AVAILABLE NITROGEN, lbs/A	166		0 lbs/A of N
BICARBONATE PHOSPHORUS, PPM	31	VH	0 lbs/A of P2O5
EXCHANGEABLE POTASSIUM, PPM	685	VH	0 lbs/A of K2O
EXCHANGEABLE MAGNESIUM, PPM	382	H	0 lbs/A of MgO
EXCHANGEABLE CALCIUM, PPM	2750	H	
EXCHANGEABLE SODIUM, PPM	129	M	
EXCHANGEABLE SODIUM PERCENTAGE, %	2.9		

Soil Depth = 18" Inches

There were no problems with the analyses and all data met laboratory quality assurance specifications.

Analyst

SOIL FERTILITY REPORT

SUBMITTED BY Le Grand Merd Dairy
ADDRESS 123556 Many Farms Rd
Where Are We Az 88888

GROWER
LAB NUMBER
SAMPLE NUMBER

SAMPLE MARKING	Field # 1, Sample #2	CROP	Oats	DATE RECEIVED	4/18/00
		YIELD GOAL	3200	DATE REPORTED	5/2/00

Lab Tests	Result	Level	Suggested Recommendations
pH, S.U.	7.5		
ELECTRICAL CONDUCTIVITY, mmhos/CM	0.9	VL	
FREE LIME, --	YES		
ORGANIC MATTER, %	1.5		
NITRATE-N, PPM	7		
AVAILABLE NITROGEN, lbs/A	155		20 lbs/A of N
BICARBONATE PHOSPHORUS, PPM	23	VH	0 lbs/A of P2O5
EXCHANGEABLE POTASSIUM, PPM	850	VH	0 lbs/A of K2O
EXCHANGEABLE MAGNESIUM, PPM	442	H	0 lbs/A of MgO
EXCHANGEABLE CALCIUM, PPM	2988	H	
EXCHANGEABLE SODIUM, PPM	137	M	
EXCHANGEABLE SODIUM PERCENTAGE, %	2.8		

Soil Depth = 18" Inches

There were no problems with the analyses and all data met laboratory quality assurance specifications.

Analyst

Laboratory Consultants, Ltd.

IRRIGATION WATER ANALYSIS REPORT

Client:	Le Grand Merd Dairy
Sample Location:	Sample #1
Date Sampled:	N/A
Date Analyzed:	5/12/00
Date Reported:	5/15/00
Laboratory Number:	

	PPM	MEQ/L	LB/ACFT
Carbonate	0	0.00	0
Bicarbonate	229	3.76	624
Calcium	84	4.17	227
Magnesium	38	3.08	102
Potassium	169	4.32	459
Sodium	202	8.78	549
Nitrate-N	5	0.34	13
Sulfate-SO4	193	4.02	526
Phosphate-P	1.33	0.22	3.6
Zinc	0.06	0.00	0.2
Copper	0.00	0.00	0.0
Manganese	0.09	0.01	0.2
Iron	0.52	0.03	1.4
Boron	0.5	0.05	1.4
Chloride	535	15.09	1455

Total Salts, ppm	1344
pH, S.U.	7.6
Conductivity,mmhos/cm	2.10
SAR	4.6
Adj SAR	11.2
Salinity Hazard	HIGH
Sodium Hazard	HIGH

Analyst: _____

Laboratory Consultants, Ltd.

IRRIGATION WATER ANALYSIS REPORT

Client:	Le Grand Merd Dairy
Sample Location:	Sample #2
Date Sampled:	N/A
Date Analyzed:	5/12/00
Date Reported:	5/15/00
Laboratory Number:	

	PPM	MEQ/L	LB/ACFT
Carbonate	0	0.00	0
Bicarbonate	232	3.80	630
Calcium	106	5.26	287
Magnesium	45	3.66	121
Potassium	153	3.92	417
Sodium	192	8.35	522
Nitrate-N	4	0.29	11
Sulfate-SO4	173	3.59	469
Phosphate-P	2.01	0.32	5.5
Zinc	0.02	0.00	0.1
Copper	0.00	0.00	0.0
Manganese	0.31	0.02	0.8
Iron	0.71	0.04	1.9
Boron	0.6	0.05	1.6
Chloride	555	15.65	1510

Total Salts, ppm	1139
pH, S.U.	7.5
Conductivity,mmhos/cm	1.78
SAR	4.0
Adj SAR	9.6
Salinity Hazard	HIGH
Sodium Hazard	HIGH

Analyst: _____

Laboratory Consultants, Ltd.

IRRIGATION WATER ANALYSIS REPORT

Client:	Le Grand Merd Dairy
Sample Location:	Sample #3
Date Sampled:	N/A
Date Analyzed:	5/12/00
Date Reported:	5/15/00
Laboratory Number:	

	PPM	MEQ/L	LB/ACFT
Carbonate	0	0.00	0
Bicarbonate	195	3.20	531
Calcium	78	3.89	212
Magnesium	33	2.71	90
Potassium	66	1.70	181
Sodium	133	5.79	362
Nitrate-N	2	0.18	7
Sulfate-SO4	102	2.12	277
Phosphate-P	1.11	0.18	3.0
Zinc	0.02	0.00	0.1
Copper	0.00	0.00	0.0
Manganese	0.32	0.02	0.9
Iron	0.61	0.03	1.7
Boron	0.3	0.03	0.9
Chloride	475	13.40	1292

Total Salts, ppm	826
pH, S.U.	7.8
Conductivity,mmhos/cm	1.29
SAR	3.2
Adj SAR	7.8
Salinity Hazard	HIGH
Sodium Hazard	HIGH

Analyst: _____

United States
Department of
Agriculture

Natural
Resources
Conservation
Service

USDA

SUBJECT: ENG-GEOLOGIC EVALUATION OF DAIRY WASTE STORAGE POND;

DATE:

TO:

SUBJECT CODE: 210-16-7

Introduction: The waste storage pond is a component of the waste management system under installation at the dairy. The pond will be used for temporary storage of wash water.

The pond had been excavated to a depth of 10 to 12 feet. We attempted use a bucket auger to examine the soils below the floor of the excavation but encountered a caliche layer less than 1 foot below the floor and were unable to go deeper. We then attempted to dig through the caliche with a shovel and rock pick but were unsuccessful.

The soils exposed in the upper seven feet of the pit sides are silty sands (USCS symbol SM), silty clays (CL-ML), and silts (ML). A layer of calcite and gypsum-rich silty sand is present two to 4 feet below the land surface. Soil exposed in the lower three feet are clays (CL) and silty clays(CL-ML). Most of the soils reacted strongly when tested with hydrochloric acid, an indicator of high calcite content.

Recommendation: The caliche layer beneath the pond will restrict vertical seepage loss. The potential exists for excessive lateral seepage because of the permeability of the sands and silts and also the potentially soluble gypsum that is present. The operator should consider installing a compacted clay liner to minimize the potential for lateral seepage losses. A sample of the soils in the lower three feet of the pond was collected and can be tested to assess its suitability for use as liner material.

United States Department of Agriculture USDA

Natural Resources Conservation Service

National Soil Mechanics Center

Subject: Arizona (CO-01)

April 30, 1999

Supplemental Report
Field Office

To: Staff, Civil Engineer
NRCS State Office

210-22

INTRODUCTION

Three additional permeability tests were performed on a sample from this site to determine the treatment required obtaining a k value of 1×10^{-7} cm/sec or less.

INTERPRETATION AND DISCUSSION OF DATA

Permeability Test Results

Flexible wall permeability tests were performed on the sample for three different conditions. Tests were performed to evaluate the effect on permeability of adding varying amounts of bentonite.

The following table summarizes results of the permeability tests. Tests were performed in accordance with ASTM D5084 procedures.

Sample Number	Test γ_d (% Max. γ_d	Test Water Content, %	Additive Type	* Additive Rate (lb/ft^2)	k Value, (cm/sec)	k Value, (ft/day)
1.1(99-121)	95.0	+2.3	Fine Bentonite	1.5	3.3×10^{-7}	0.00094
"	95.0	+1.6	Coarse Bentonite	2.0	2.1×10^{-6}	0.0059
"	95.1	+2.0	Fine Bentonite	2.0	1.5×10^{-7}	0.00041

*** Rate given is in terms of pounds per square foot mixed into a compacted 4" thick layer for bentonite.**

CONCLUSIONS AND RECOMMENDATIONS

Permeability tests show that a satisfactorily low permeability can be obtained for these soils by compacting them to 95 percent of maximum Standard Proctor dry density, at a water content 2 percent above optimum or higher. Finely ground bentonite, added at the rate of 2.0 pounds per square foot for each 4" thick compacted lift, is required to produce a k value near that required of 1×10^{-7} cm/sec. A test performed under these conditions measured a k value of 1.5×10^{-7} cm/sec. Guidance in Appendix 10D to the Ag Waste Management Field Handbook shows methods for calculating specific discharge, and the liner thickness may be varied to compensate for the slightly higher k value obtained for these conditions.

A lower k value of less than 1.5×10^{-7} cm/sec can be obtained by using a higher application rate of finely ground bentonite – 2.5 pounds per square foot for each 4" thick compacted lift, in our opinion. Based on the reduction in the k value between tests performed with 1.5 and 2.0 pounds per square foot of finely ground bentonite (the k value was reduced by ½), our opinion is that a soil with 2.5 pounds per square foot will have a k value less than the desired 1×10^{-7} cm/sec.

The tests demonstrate that finely ground bentonite is more effective than coarsely ground bentonite. This has been commonly found on previous tests of similar soils. The disadvantages of using finely ground bentonite are the tendency to be easily blown by winds after application, and the greater difficulty of spreading it evenly, compared to coarsely ground bentonite.

Using soils like those submitted, the following recommendations should be considered:

1) Finely ground bentonite should be added to the soils at the rate of 2.5 pounds per square foot, mixed into a compacted 4 inch thick layer. A total liner thickness of at least 8 inches is recommended. Therefore, a total quantity of bentonite of 5.0 pounds per square foot is recommended. We recommend finely ground bentonite for its improved reduction in permeability..

2) Compact the soils to at least 95 percent of maximum Standard Proctor dry density at a water content of about two percent wet of optimum, or wetter. This can most effectively be accomplished with a smooth-wheeled type of roller.

3) Natural water content tests shows that the natural water contents of these soils may be significantly dry of optimum. This is ideal for application of bentonite, but water will need to be added after mixing the bentonite to promote the reaction of the bentonite.

4) We recommend the side slopes of the facility have no steeper than 4H:1V slopes to permit efficient compaction by the equipment on the slopes.

Please requests any other needed testing.

Prepared by:

Soil Mechanics Laboratory, NRCS

Subject:
Date:
From: Geologist
To: Staff
CC:

We have just performed the hydrometer analysis on the two samples today. We will be running compaction and Atterberg limit tests next week and then the permeability tests the following week.

Sample 1 is probably a CL soil. It has 68 percent finer than the #200 sieve, and 30 percent finer than 5 microns. Usually, soils with this amount of clay have a LL value of about 30 and a PI of about 12-15. This would place the soil in Group II of 10D. These soils usually have a very low k value, less than 1 x 10-6 cm/sec, if they are at a natural condition about equal to 95 percent of Standard Proctor dry density, and the soils don't have an excessively high calcium content.

Sample 2 is not as good. It has 55 percent finer than the #200 sieve and 23 percent finer than 5 microns. This soil will definitely be in group II, and probably has a PI value of less than 8. It will probably be a CL-ML or ML soil. It is unlikely to have a satisfactorily low permeability unless highly compacted at optimum water content, or unless bentonite is added to it.

Only the permeability tests we plan can provide more reliable information.

Geologist

COMPUTATION SHEET
NRCS-ENG-523a Rev. 6-01

U.S. DEPARTMENT OF AGRICULTURE
NATURAL RESOURCES CONSERVATION SERVICE

ARIZONA	***PROJECT*** Waste Storage Lagoon Capacity Calculation		***JOB #*** CNMP-1
BY staff	***DATE*** 6/27/01	***CHECKEDY BY***	***DATE***
SUBJECT Le Grande Merd Dairy			***SHEET 1 OF 1***

Given: Lagoon dimensions 910' x 34' surface
25' inside bottom width
910' 12', 18', 14.5', 7' depths

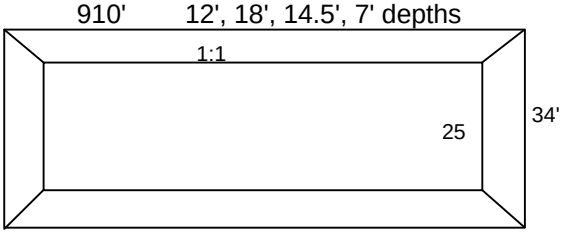

Calculate lagoon capacity using the formula: V = (A + 4B + C) / 6 * d / 27
Where A = Surface area of lagoon in ft^2
B = area at mid depth in ft^2
C = area of bottom in ft^2

Due to varying depth, volume will be determine at each depth listed above, according to the length at that depth.

The answer to the volume calculation is in acre-feet

Reach 1 350' x 34' 12'

A	B	C	d	V
350 x 34	350 x 29	350 x 25	12	2.81
11,900	40,600	8,750		

Reach 2 77' x 34' x 18'

A	B	C	d	V
77 x 34	77 x 29	77 x 25	18	0.93
2,618	8,932	1,925		

Reach 3 130' x 34' x 14.5'

A	B	C	d	V
130 x 34	130 x 29	130 x 25	14.5	1.26
4,420	15,080	3,250		

Reach 4 140' x 34' x 10'

A	B	C	d	V
140 x 34	140 x 29	140 x 25	10	0.94
4,760	16,240	3,500		

Reach 5 260' x 34' x 7'

A	B	C	d	V
260 x 34	260 x 29	260 x 25	7	1.22
8,840	30,160	6,500		

V_{total} = 7.16

United States Department of Agriculture
Natural Resources Conservation Service
Arizona

Operation and Maintenance Plan For Your Waste Utilization

Cooperator Le Grand Merd Dairy Date 12/14/2001

Address 123556 Many Farms Rd.

Location: Section 1, 2, and 3 Twn 0S Range 0E Field No. _____

NRCS Field Office Field County Where Are You

This conservation practice is an asset to your farm or ranch. This practice will need periodic operation and maintenance to maintain satisfactory performance. The life of this practice or system is at least 10 years. The life of this practice can be assured or extended by thorough and timely operation and maintenance. Here are some recommendations to help you develop a good operation and maintenance program.

GENERAL RECOMMENDATIONS

☐ Operate system in accordance with health laws and minimize adverse environmental impacts.

☐ Maintain all equipment used to transport and apply animal waste in good operating condition. Avoid spills or leakage when transporting.

☐ Apply waste only to the areas designated for disposal in the Waste Management Plan.

☐ Apply waste at the rates designated in the Waste Management Plan. The amount of wastes (solid or liquid) shall be applied at a rate without damaging vegetation or exceeding drainage or soil capabilities.

☐ Apply waste in a manner that minimizes odor and air drift.

Specific Recommendations For Your Installation

United States Department of Agriculture
Natural Resources Conservation Service
Arizona

Operation and Maintenance Plan For Your Structure For Water Control

Cooperator Le Grand Merd Dairy Date 12/14/2001

Address 123556 Many Farms Rd.

Location: Section 1,2, and 3 Twn 0S Range 0E Field No. _____

NRCS Field Office Field County Where Are You

This conservation practice is an asset to your farm or ranch. This practice will need periodic operation and maintenance to maintain satisfactory performance. The life of this practice or system is at least 10 years. The life of this practice can be assured or extended by thorough and timely operation and maintenance. Here are some recommendations to help you develop a good operation and maintenance program.

GENERAL RECOMMENDATIONS

- ☐ All fences, railings, and/or warning signs shall be maintained to provide warning and/ or prevent unauthorized human or livestock entry.
- ☐ Maintain vigorous growth of desirable vegetative coverings. This includes irrigation, reseeding, fertilization, and controlled application of herbicides when necessary. Periodic mowing may also be needed to control height.
- ☐ Remove any debris that may accumulate on or in the immediate area of the structure.
- ☐ Make sure that all structural drains are functional.
- ☐ Determine and eliminate causes of settlement or cracks in the earthen sections and repair damage.
- ☐ Repair spalls, cracks and weathered areas in concrete surfaces.
- ☐ Repair or replace rusted or damaged metal and paint.
- ☐ Check all valves, gates, and other appurtenances for proper functioning. If worn or damaged, repair or replace following the manufacturer's recommendations.
- ☐ Replace weathered or displaced rock riprap to constructed grade.
- ☐ Check all timber or lumber sections for decay and other damage, especially, sections in contact with earth or other materials. Repair damaged sections and apply protective coatings as needed.
- ☐ Control all rodents or burrowing animals. Immediately repair any damage caused by their activity.

- [ ] Immediately repair any damage from vandalism, vehicles, or livestock to any earthfills, spillways, or outlets or other appurtenances.

Specific Recommendations For Your Installation

United States Department of Agriculture
Natural Resources Conservation Service
Arizona

Operation and Maintenance Plan For Your Irrigation Pit or Regulation Reservoir and Storage Reservoir

Cooperator Le Grand Merd Dairy Date 12/14/2001

Address 123566 Many Farms Rd.

Location: Section 1, 2, and 3 Twn 0S Range 0E Field No. _____

NRCS Field Office Field County Where Are You

This conservation practice is an asset to your farm or ranch. This practice will need periodic operation and maintenance to maintain satisfactory performance. The life of this practice or system is at least 10 years. The life of this practice can be assured or extended by thorough and timely operation and maintenance. Here are some recommendations to help you develop a good operation and maintenance program.

GENERAL RECOMMENDATIONS

- ☐ Periodically inspect the spillways and control gates for proper operation and for their ability to maintain the water level to design elevations.
- ☐ Immediately remove any blockage or obstructions of spillways, trash racks, and pipelines.
- ☐ Maintain vigorous growth of desirable vegetative coverings. This includes irrigation, reseeding, fertilization, and controlled application of herbicides when necessary. Periodic mowing may also be needed to control height.
- ☐ If fences are installed, they shall be maintained to prevent unauthorized or livestock entry.
- ☐ Remove debris that may accumulate at the pond and immediately upstream or downstream from the pond.
- ☐ Make sure all structure drains are functional and soil is not being transported through the drainage system. Repair if not functioning. The screens and/or rodent guards shall also be kept in place.
- ☐ Control all rodents or burrowing animals and repair any damage caused by their activity.
- ☐ Immediately repair any damage from vandalism, vehicles, or livestock to any earthfills, spillways, outlets or other appurtenances.
- ☐ Remove woody vegetation from embankments.
- ☐ Avoid excessive travel on any portion of the system that will harm or destroy the vegetative cover.

Specific Recommendations For Your Installation

United States Department of Agriculture
Natural Resources Conservation Service
Arizona

Operation and Maintenance Plan For Your Pumping Plant For Water Control

Cooperator Le Grand Merd Dairy Date 12/14/2001

Address 123556 Many Farms Rd.

Location: Section 1, 2, and 3 Twn 0S Range 0E Field No. _____

NRCS Field Office Field County Where Are You

This conservation practice is an asset to your farm or ranch. This practice will need periodic operation and maintenance to maintain satisfactory performance. The life of this practice or system is at least 10 years. The life of this practice can be assured or extended by thorough and timely operation and maintenance. Here are some recommendations to help you develop a good operation and maintenance program.

GENERAL RECOMMENDATIONS

- ☐ Maintain all pumps, agitators, piping, valves, and other electrical and mechanical equipment in good operating condition following the manufacturer's recommendations.
- ☐ Maintain grounding rods and wiring of all electrical equipment in good working condition.
- ☐ Maintain all safety shields on pumps, motors, or other electrical or mechanical equipment.
- ☐ Check all pump bases and mountings for durability and ability to hold the pump in place without vibration; repair when necessary.
- ☐ Replace, repack, or tighten the seals when leakage is in excess of manufacturer's recommendations.
- ☐ Drain all pumps and piping including valves that are subject to freezing. If parts of the system cannot be drained, a non-corrosive anti-freeze solution shall be added.
- ☐ Replace weathered or displaced rock riprap to constructed grade.
- ☐ Maintain surface drainage around the pumping plant to avoid ponding of water.
- ☐ Immediately repair any damage from vandalism, vehicles, or livestock to the structure, earthen areas surrounding the structure, or any appurtenances.
- ☐ Control all rodents or burrowing animals. Immediately repair any damage caused by their activity.

Specific Recommendations For Your Installation

United States Department of Agriculture
Natural Resources Conservation Service
Arizona

Operation and Maintenance Plan For Your Irrigation System - Surface

Cooperator Le Grand Merd Dairy Date 12/14/2001

Address 123556 Many Farms Rd.

Location: Section 1, 2, and 3 Twn 0S Range 0E Field No. _____

NRCS Field Office Field County Where Are You

This conservation practice is an asset to your farm or ranch. This practice will need periodic operation and maintenance to maintain satisfactory performance. The life of this practice or system is at least 10 years. The life of this practice can be assured or extended by thorough and timely operation and maintenance. Here are some recommendations to help you develop a good operation and maintenance program.

GENERAL RECOMMENDATIONS

- ☐ Operate the system only when needed to furnish water for plant growth.
- ☐ Operate the system at the pressure, discharge rate, duration, and frequency as designed.
- ☐ Promptly repair all leaks by replacing gaskets or worn parts and patching concrete.
- ☐ Make sure that the runoff water is promptly removed by a drainage or tail water recovery system.
- ☐ During non-seasonal use, drain and place the removable parts of the system in an area where it will not be damaged.
- ☐ Maintain all pumps, agitators, piping, valves and other electrical and mechanical equipment in good operating condition following the manufacturer's recommendations.
- ☐ Control all rodents or burrowing animals. Immediately repair any damage caused by their activity.
- ☐ Immediately repair any damage from vandalism, vehicles, or livestock.

Specific Recommendations For Your Installation

United States Department of Agriculture
Natural Resources Conservation Service
Arizona

Operation and Maintenance Plan For Your Irrigation Ditch or Canal Lining

Cooperator Le Grand Merd Dairy Date 12/14/2001

Address 123556 Many Farms Rd.

Location: Section 1, 2, and 3 Twn 0S Range 0E Field No. _____

NRCS Field Office Field County Where Are You

This conservation practice is an asset to your farm or ranch. This practice will need periodic operation and maintenance to maintain satisfactory performance. The life of this practice or system is at least 10 years. The life of this practice can be assured or extended by thorough and timely operation and maintenance. Here are some recommendations to help you develop a good operation and maintenance program.

GENERAL RECOMMENDATIONS

- ☐ Maintain adequate drainage of the foundation.
- ☐ Maintain the widths and heights of soil berms adjacent to the lining.
- ☐ Drain all lined ditches when not being used.
- ☐ Immediately repair any cracks or breaks in the lining. Investigate cause before repair and take measures to prevent reoccurrence.
- ☐ Avoid the use of tillage equipment adjacent to the lining.
- ☐ If livestock are present, prevent their access to the lining.
- ☐ Remove sediment, debris or any blockage that restricts capacity.
- ☐ Remove woody vegetation and perennials from areas adjacent to lining.
- ☐ Repair spalls, cracks and weathered areas in concrete surfaces.
- ☐ Immediately repair any damage from vandalism, vehicles, or livestock.
- ☐ Control all rodents or burrowing animals. Immediately repair any damage caused by their activity.
- ☐ Avoid crossings of equipment or vehicles except at designated areas.

Specific Recommendations For Your Installation

United States Department of Agriculture
Natural Resources Conservation Service
Arizona

Operation and Maintenance Plan For Your Irrigation Pipeline

Cooperator Le Grand Merd Dairy Date 12/14/2001

Address 123556 Many Farms Rd.

Location: Section 1, 2, and 3 Twn 0S Range 0E Field No. _____

NRCS Field Office Field County Where Are You

This conservation practice is an asset to your farm or ranch. This practice will need periodic operation and maintenance to maintain satisfactory performance. The life of this practice or system is at least 10 years. The life of this practice can be assured or extended by thorough and timely operation and maintenance. Here are some recommendations to help you develop a good operation and maintenance program.

GENERAL RECOMMENDATIONS

- ☐ Check to make sure all valves and air vents are set at the proper operating condition so they may provide protection to the pipeline.
- ☐ Maintain the design depth of cover over the pipeline.
- ☐ Limit traffic over the pipeline to designated sections that were designed for traffic loads.
- ☐ Avoid travel over pipelines by tillage equipment when the soil is saturated.
- ☐ Avoid any subsoiling operation that may disturb the pipeline.
- ☐ Remove all foreign debris that hinders system operation.
- ☐ Drain the system and components in areas that are subject to freezing. If parts of the system cannot be drained, an anti-freeze solution shall be added.
- ☐ Control all rodents or burrowing animals. Immediately repair any damage caused by their activity.
- ☐ Allow the pipe to fill gradually when being put into use after shut down or draining.
- ☐ Periodically check and repair all valves, gates and regulators to the system requirements following the manufacturer's recommendations.
- ☐ Immediately repair any damage from vandalism, vehicles, or livestock to any outlets and appurtenances.

Specific Recommendations For Your Installation

United States Department of Agriculture
Natural Resources Conservation Service
Arizona

Operation and Maintenance Plan For Your Waste Storage Pond or Waste Treatment Lagoon

Cooperator Le Grand Merd Date 12/14/2001

Address 123556 Many Farms Rd.

Location: Section 1, 2, and 3 Twn 0S Range 0E Field No. _____

NRCS Field Office Field County Where Are You

This conservation practice is an asset to your farm or ranch. This practice will need periodic operation and maintenance to maintain satisfactory performance. The life of this practice or system is at least 10 years. The life of this practice can be assured or extended by thorough and timely operation and maintenance. Here are some recommendations to help you develop a good operation and maintenance program.

GENERAL RECOMMENDATIONS

☐ Maintain all pumps, agitators, piping, valves, and other electrical and mechanical equipment in good operating condition following the manufacturer's recommendations.

☐ Maintain grounding rods and wiring of all electrical equipment in good working condition.

☐ Prior to the storage season, empty the pond to provide storage capacity for the accumulation of animal wastes and precipitation during the storage period.

☐ Fences and/or warning signs shall be maintained to prevent unauthorized human or livestock entry.

☐ Immediately repair any damage from vandalism, vehicles, or livestock to any earthfills, spillway, outlets, or other appurtenances.

☐ Maintain vigorous growth of desirable vegetative coverings. This includes reseeding, fertilization, and controlled application of herbicides when necessary. Periodic mowing or grazing may be needed to control height.

☐ Remove any foreign debris in or adjacent to the waste storage pond.

☐ Determine and eliminate causes of settlement or cracks in the earthen sections and repair damage.

☐ Repair spalls, cracks and weathered areas in concrete surfaces.

☐ Repair or replace rusted or damaged metal and paint.

☐ Replace weathered or displaced rock riprap to constructed grade.

- ☐ Make sure all structure drains are functional and soil is not being transported through the drainage system. The screens and/or rodent guards shall also be kept in place.
- ☐ Control all rodent or burrowing animals and repair any damage caused by their activity.
- ☐ Immediately remove any obstructions or blockage of spillways, trash racks, or pipe inlets.
- ☐ Apply insecticides for insect control as per the manufacturer's recommendations and precautions, as needed.
- ☐ Operate system in a manner that minimizes odors and air drift.

Specific Recommendations For Your Installation

United States Department of Agriculture
Natural Resources Conservation Service
Arizona

Operation and Maintenance Plan For Your Waste Storage Structure

Cooperator Le Grand Merd Date 12/14/2001

Address 123556 Many Farms Rd.

Location: Section 1, 2, and 3 Twn 0S Range 0E Field No. _____

NRCS Field Office Field County Where Are You

This conservation practice is an asset to your farm or ranch. This practice will need periodic operation and maintenance to maintain satisfactory performance. The life of this practice or system is at least 10 years. The life of this practice can be assured or extended by thorough and timely operation and maintenance. Here are some recommendations to help you develop a good operation and maintenance program.

GENERAL RECOMMENDATIONS

- ☐ Do not allow human entry to any enclosed structure without safety equipment that includes ladders and breathing apparatus.
- ☐ Do not allow the operation of any equipment that exceeds the design load limit on the structure.
- ☐ Maintain all pumps, agitators, piping, valves, and all other electrical and mechanical equipment in good operating condition by following the manufacturers' recommendations.
- ☐ Maintain grounding rods and wiring for all electrical equipment in good condition.
- ☐ All fences, railings, and/or warning signs shall be maintained to prevent unauthorized human or livestock entry.
- ☐ Immediately repair any damage from vandalism, vehicles, or livestock to the structure, earthen areas surrounding the structure, or any appurtenances.
- ☐ Maintain all lids, grates, and shields on ramps and on openings to underground structures.
- ☐ Do not allow the operation of any vehicular equipment near the structure that might damaged.
- ☐ Immediately remove all foreign debris within the structure that may cause damage to the structure.
- ☐ Make sure that the foundation drains are functional and screens and/or rodent guards are in place.
- ☐ Maintain the soil covering adjacent to all structures at elevations shown on the plan.
- ☐ Follow the schedule developed for emptying the structure.

- ☐ Control all rodents or burrowing animals. Immediately repair any damage caused by their activity.
- ☐ Repair spalls, cracks, and weathered areas in concrete surfaces.
- ☐ Repair or replace rusted or damaged metal and paint.
- ☐ Replace weathered or displaced rock riprap to constructed grade.
- ☐ Apply insecticides, as needed, for insect control as per manufacturer's recommendations and precautions.
- ☐ Operate system in a manner to minimize odors and air drift.

Specific Recommendations For Your Installation

United States Department of Agriculture
Natural Resources Conservation Service
Arizona

Operation and Maintenance Plan For Your Irrigation System - Sprinkler

Cooperator Le Grand Merd Date 12/14/2001

Address 123556 Many Farms Rd.

Location: Section 1, 2, and 3 Twn 0S Range 0E Field No. _____

NRCS Field Office Field County Where Are You

This conservation practice is an asset to your farm or ranch. This practice will need periodic operation and maintenance to maintain satisfactory performance. The life of this practice or system is at least 10 years. The life of this practice can be assured or extended by thorough and timely operation and maintenance. Here are some recommendations to help you develop a good operation and maintenance program.

GENERAL RECOMMENDATIONS

- ☐ Only operate the system when needed to furnish water for plant growth.
- ☐ Operate the system at the pressure, discharge rate, duration and frequency as designed.
- ☐ Check to make sure that all connections are water tight and all valves are working properly.
- ☐ Periodically check the sprinkler heads for wear, and replace with proper parts when defective or excessive wear is found.
- ☐ Promptly repair all leaks by replacing gaskets or worn parts.
- ☐ During non-seasonal use, drain and place the removable parts of the system in an area where it will not be damaged.
- ☐ Immediately repair any damages from vandalism, vehicles, or livestock.

Specific Recommendations For Your Installation

ATTACH:
ENGINEERING DRAWINGS, APPROPRIATE CALCULATIONS, SPECIFICATIONS AND ANY JUSTIFICATIONS FOR ACCEPTANCE OF EXISTING STRUCTURES.
(SAMPLE DRAWING)

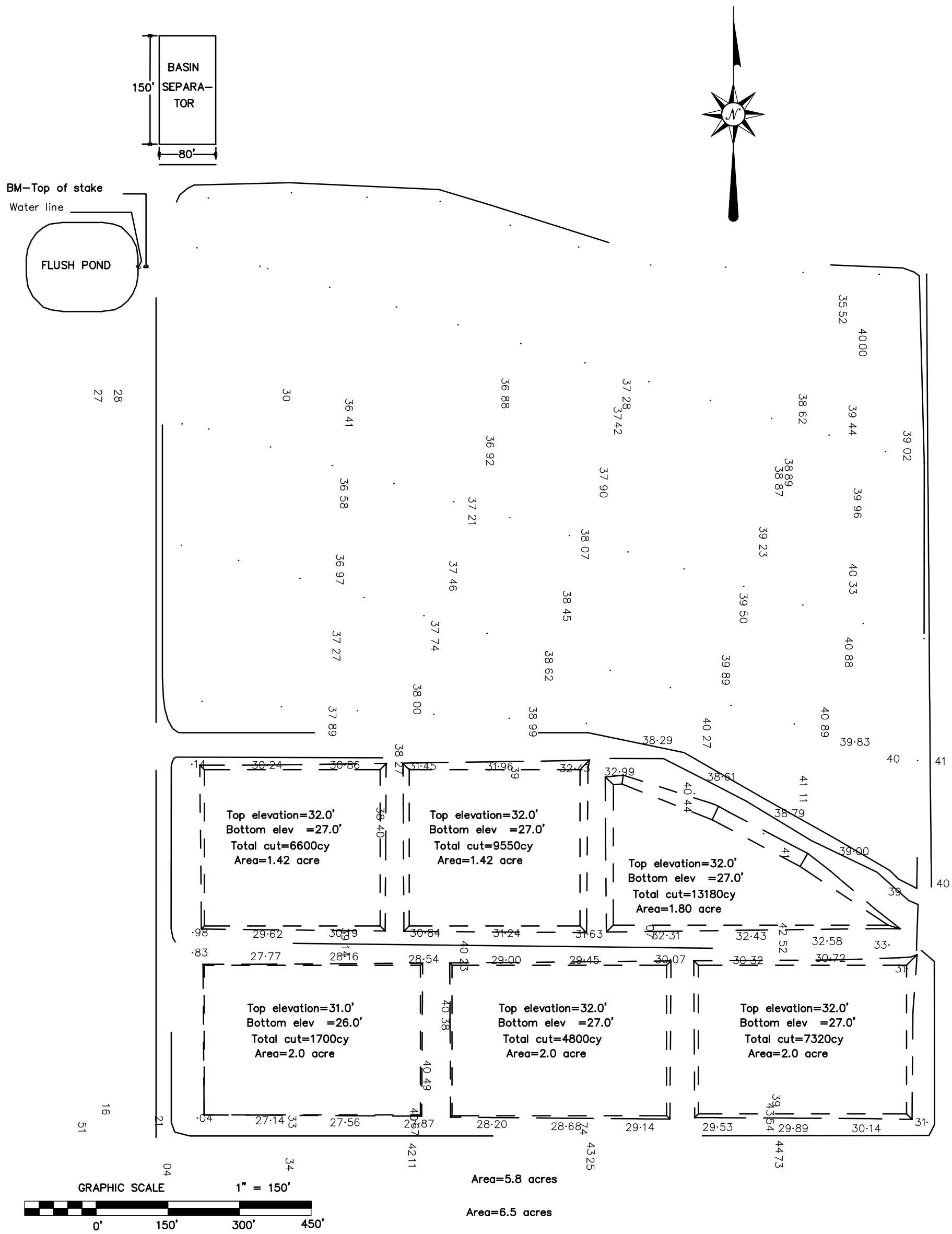

Sheet 01 of 01	Drawing No. AZ XXXXX WR	File No. AUTOCAD.dwg	USDA NRCS Natural Resources Conservation Service	PL566 - WASTE MANAGEMENT SYSTEM	Designed Designer / Drawn Cadman / Checked / Approved / Date

AGRICULTURAL WASTE STORAGE POND (EVAPORATION)

Designed by:
Checked by:

MONTH	NO. DAYS	WASTE INFLOW (ac-ft)	POND PRECIPITATION AVG. MONTHLY* (in)	(ac-ft)	FEEDLOT RUNOFF FROM PRECIPITATION (% montlhy)	(ac-ft)	TOTAL INFLOW (ac-ft)	EVAPORATION AS A % OF ANNUAL** (%monthly)	(ac-ft)	INFLOW-EVAPO (ac-ft)	1 YEAR STORAGE (ac-ft)	2 YEAR STORAGE (ac-ft)	STORAGE +25y/24hr (ac-ft)
JANUARY	31	8.99	0.73	0.80	10	0.23	10.01	3.3	3.83	6.18	6.18	20.11	30.05
FEBRUARY	28	8.12	0.59	0.64	10	0.18	8.95	4.6	5.34	3.61	9.79	23.72	33.65
MARCH	31	8.99	0.81	0.88	10	0.25	10.12	6.5	7.54	2.58	12.37	26.30	36.23
APRIL	30	8.70	0.27	0.29	10	0.08	9.08	9.2	10.68	-1.60	10.77	24.70	34.63
MAY	31	8.99	0.14	0.15	10	0.04	9.19	12	13.93	-4.74	6.03	19.96	29.89
JUNE	30	8.70	0.17	0.19	11	0.05	8.94	13	15.09	-6.15	0.00	13.81	23.74
JULY	31	8.99	0.74	0.81	12	0.23	10.03	15	17.41	-7.38	0.00	6.43	16.36
AUGUST	31	8.99	1.02	1.11	13	0.31	10.42	13	15.09	-4.67	0.00	1.76	11.69
SEPTEMBER	30	8.70	0.64	0.70	20	0.20	9.60	10	11.61	-2.01	0.00	0.00	9.94
OCTOBER	31	8.99	0.63	0.69	13	0.19	9.87	6.2	7.20	2.68	2.68	2.68	12.61
NOVEMBER	30	8.70	0.54	0.59	10	0.17	9.46	4.4	5.11	4.35	7.03	7.03	16.96
DECEMBER	31	8.99	0.83	0.91	10	0.26	10.15	2.8	3.25	6.90	13.93	13.93	23.86
total	365	105.85	7.11				115.80	100	116.06				

* SOURCE: CLIMATOGRAPHY OF THE UNITED STATES NO. 81 (BY STATE)
**SOURCE: ARIZONA CLIMATE 1931-1973, THE UofA PRESS
(annual evaporation at Mesa Experimental farm 106.31in)

DAILY WASTE WATER:	0.29	ac-ft/day	
FEEDLOT SIZE:	37	acres	*Only Pylman runoff to pond, 37 acres
AVG. ANNUAL EVAPORATION:	106.31	inches	
POND SIZE:	13.1	acres	
25YR-24HR STORM:	3.2	inches	***NOAA Atlas 2
25YR-24HR RUNOFF:	2.16	inches	TR55, CN= 90
NUMBER OF STORMS:	1		

Formulas used:

waste inflow = daily waste inflow * number of days
precipitation = precipitation (in)/12 * pond size
feedlot inflow = precipitation (in)/12* %monthly runoff/100 *feedlot size
total inflow = waste inflow + precipitation + feedlot inflow
evaporation = pond size*avg. annual evaporation/12 * % annual evaporation/100
1 year storage = last year storage + (total inflow - evaporation)
2 year storage = " "
storage + (25yr - 24hr storm) = 2nd year storage + number of storms
((POND SIZE *STORM IN/12)+(FEEDLOT SIZE *STORM RUNOFF/12))

ATTACH:
ENGINEERING DRAWINGS, APPROPRIATE CALCULATIONS, SPECIFICATIONS AND ANY JUSTIFICATIONS FOR ACCEPTANCE OF EXISTING STRUCTURES.

(SAMPLE DRAWINGS)

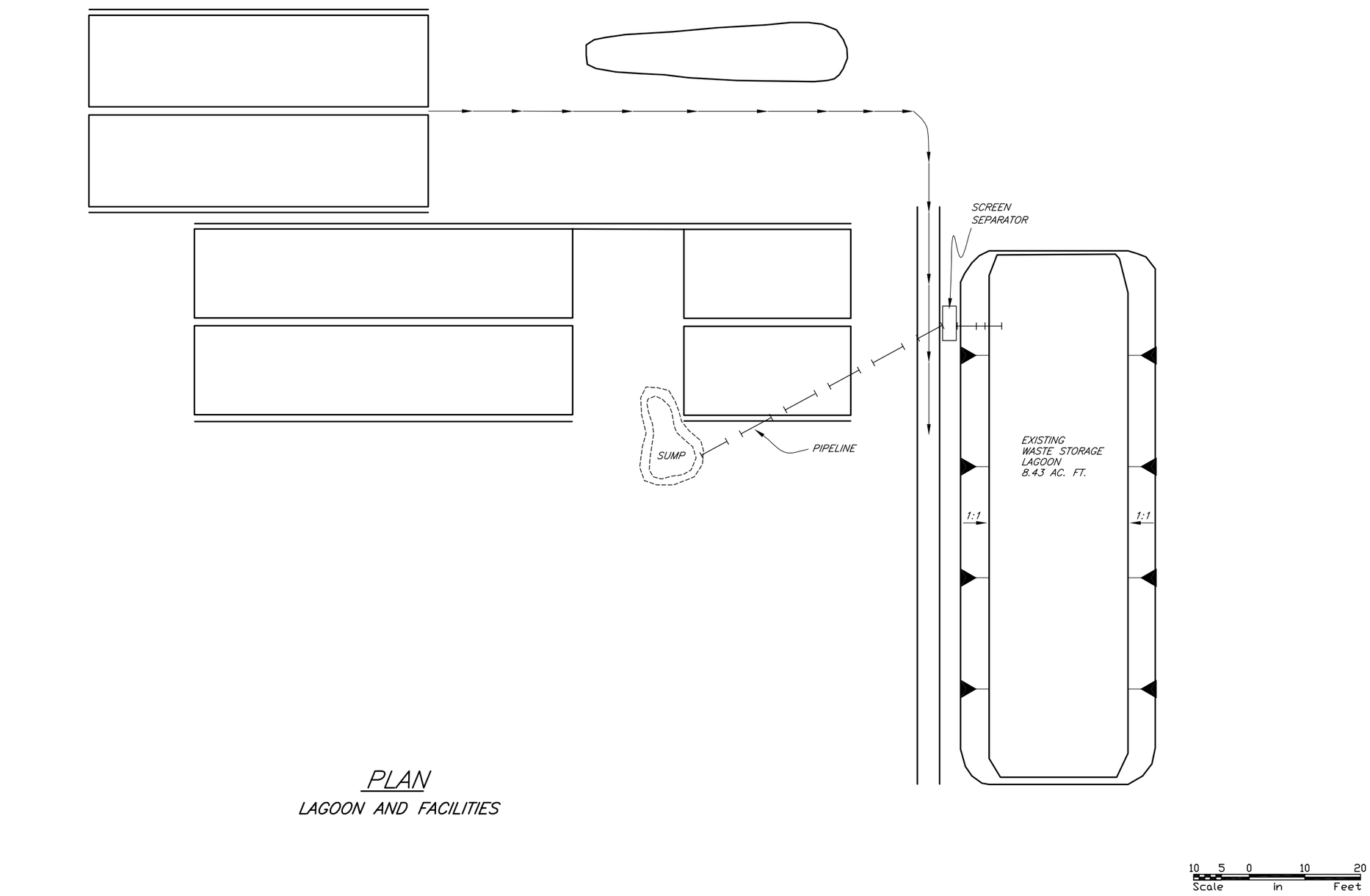

PLAN
LAGOON AND FACILITIES

		Date
Designed	P. Jacquez	12/01
Drawn	A. Molina	12/01
Checked		
Approved		

PLAN
LAGOON
MARICOPA COUNTY, ARIZONA

USDA NRCS
Natural Resources Conservation Service

File No.
LAGOON.dwg

Drawing No.
AZ 01001 CH

Sheet 01 of 02

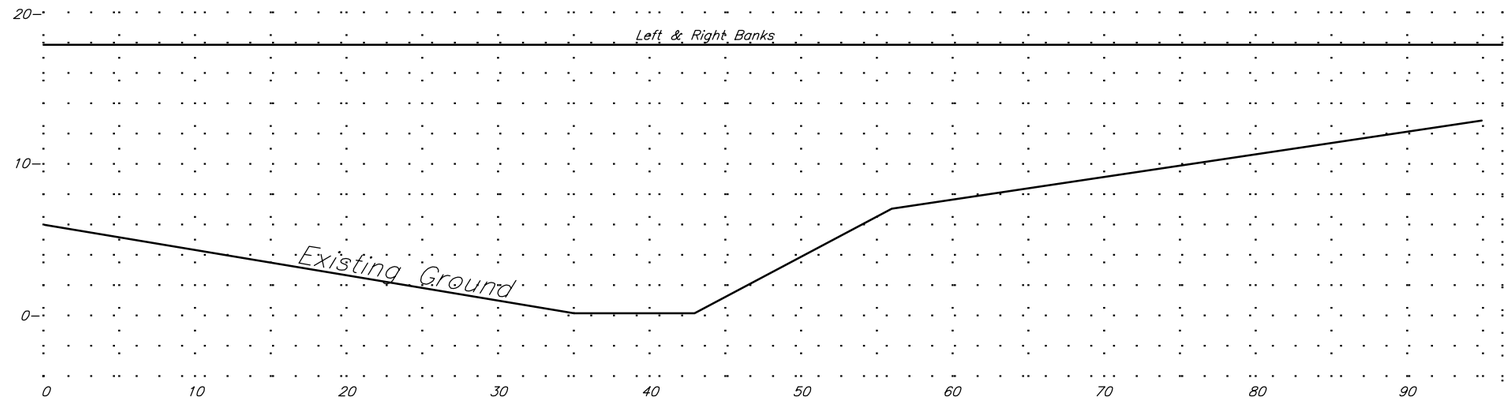

PROFILE LAGOON

Scale in Feet: 5 0 5 10

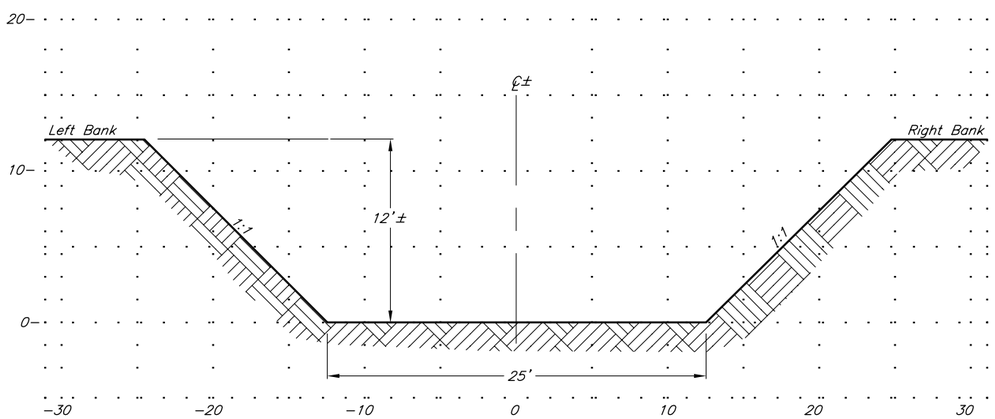

0+00

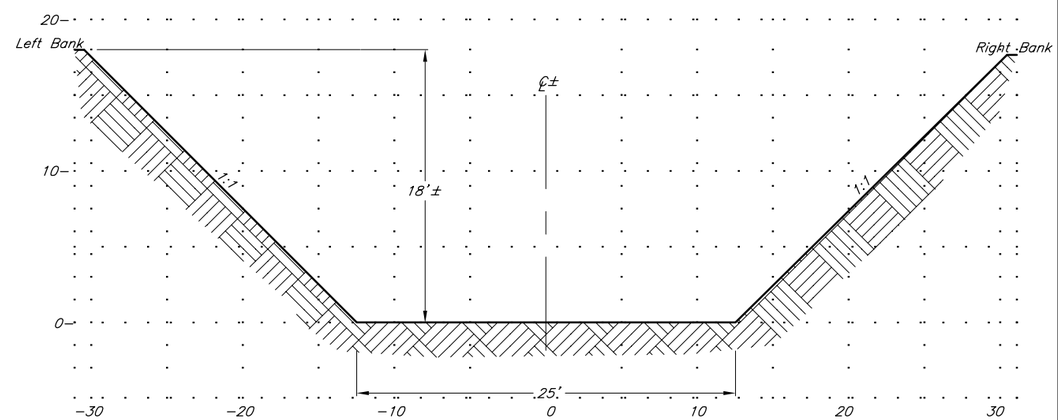

0+43

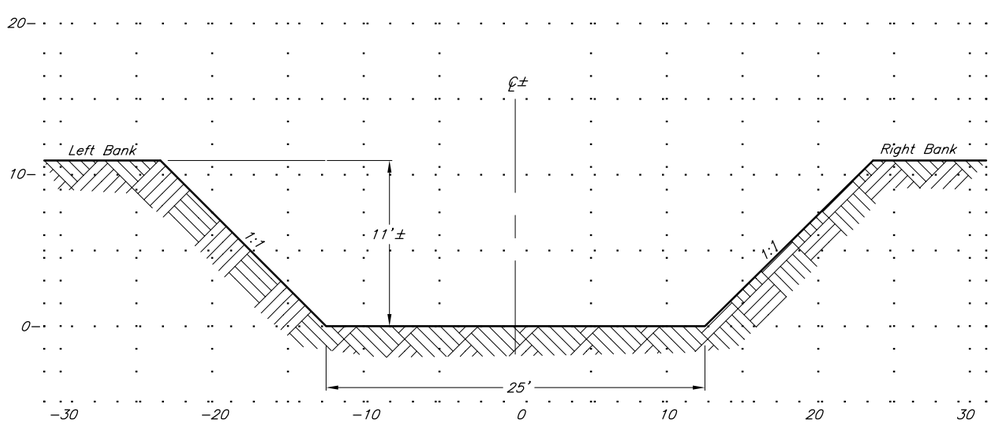

0+56

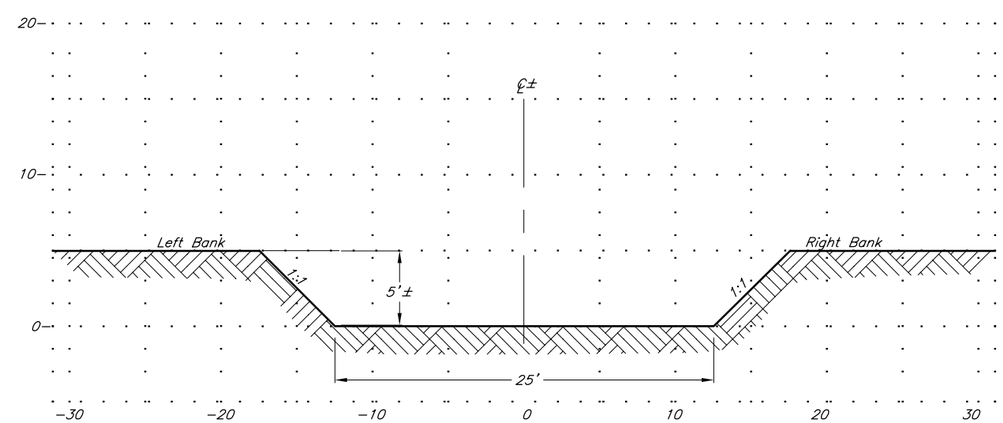

0+95

Date

Designed

Drawn

Checked

Approved

CROSS SECTIONS

LAGOON

USDA NRCS Natural Resources Conservation Service

File No.
LAGOON.dwg

Drawing No.
AZ 01001 CH

Sheet 02 of 02

THIS WORKSHEET SHALL BE COMPLETED FOR EACH SITE AND SHALL BE A SITE SPECIFIC DOCUMENT

ARIZONA NRCS ENVIRONMENTAL EVALUATION WORKSHEET

Name: Date_____

Field Office: Conservation District:

Cooperator/Sponsor:

Project Location:

Watershed or Channel Name/Reach:

Scope of Proposed Project:

Person(s) completing Worksheet: Reviewed/Concurred by:

Environmental Evaluation: Environmental effects can be beneficial or adverse. Indicate the effect the activity may have for each of the items on the worksheet, either onsite or offsite within the watershed. In the notes explain effects and ways to mitigate any adverse effects. Attach additional sheets, photos, or diagrams as needed. **(See General Manual 190, Section 410 for NEPA Policy)**

Short Term - Considered the installation/construction period. **Long Term** - That time necessary to restore to desired conditions.

CODE: **+** Beneficial Effect, **0** No Effect, **-** Adverse Effect, **N/A** Not Applicable

		Short Term Effect	Long Term Effect	Notes
I.	**SOIL: Will the proposed project result in:**			
a.	Alterations to the natural soil surface (i.e. displacements, compaction, excessive overburden, restoration, etc.)?			
b.	Changes in soil fertility?			
c.	Alteration to unique geologic or natural physical features (i.e. covering, partial destruction, protection, etc.)?			
d.	Changes in wind or water erosion of soils on or off site?			
e.	Changes in siltation, deposition or erosion which may impact or modify the stream or river channel or lakebed?			
f.	Changes in exposure of people or property to geologic hazards (i.e. landslides, mudslides, subsidence, etc.)?			
II.	**WATER: Will the proposed project result in:**			
a.	Changes in stream channel dimension, pattern, and/or slope (including down stream impacts)?			
b.	Changes in surface water infiltration rates, drainage patterns, velocities and/or volumes?			
c.	Changes in discharge into surface waters or in alterations of surface water quality, including, but not limited to temperature or turbidity?			
d	Changes in wetland hydrology.			
e.	Changes in the quantity of ground waters through either direct additions/withdrawals or interception of aquifers by excavation?			
f.	Changes in ground water quality?			
g.	Substantial changes in the amount of water available for public use?			
h.	Impacts on Wild & Scenic rivers or unique waters?			
i.	Impacts to floodplains or floodplain management?			
j.	Changes in exposure of people or property to flooding?			
III.	**AIR: Will the proposed project result in:**			
a.	Impacts to air quality, either on or offsite?			
b.	Impacts to air quality non-attainment areas?			
c.	Impacts to other air quality factors (i.e. odor, airborne drift, visual clarity, etc.)?			
IV.	**PLANTS: Will the proposed project result in:**			
a.	Change in the diversity of species, or numbers of any plant species (upland, riparian, wetland, etc.)?			

b.	Changes in the numbers or health & vigor of any unique, rare, species of concern, threatened or endangered plants (review appropriate lists)?			
c.	Impacts on the normal recruitment of existing, native species?			
d.	Change in acres of prime or unique cropland?			
e.	Change in opportunity for noxious weeds to become established or spread?			
f.	Changes in plant functional groups (warm vs. cool season) or structural groups (grass-shrub-tree)?			
V.	**ANIMALS: Will the proposed project result in:**			
a.	Change in the diversity of species, or numbers of any species of animals (birds, mammals, reptiles, amphibians, fish, invertebrates)?			
b.	Impacts on any unique, rare, species of concern, threatened, or endangered animals (review appropriate lists)?			
c.	Impacts on indigenous animals (migration barriers, competition from non-natives, etc.)?			
d.	Impacts on existing fish & wildlife habitat or critical habitat (nesting, calving, winter, etc.)?			
e.	Changes in human activity during sensitive life stages(nesting, spawning, hibernating, etc)?			
VI.	**CULTURAL RESOURCES: Will the proposed project result in:**			
a.	Impacts to a prehistoric or historic archeological site (including protection of)?			
b.	Physical or aesthetic impacts to prehistoric or historic structures or objects?			
c.	Impacts on unique ethnic cultural values of a site?			
d.	Changes to existing religious or sacred uses within the potential impact area?			
VII.	**OTHER HUMAN CONSIDERATIONS: Will the proposed project result in:**			
a.	Changes in existing noise levels?			
b.	Impacts on present or planned land uses?			
c.	Alteration of any landscape resource, aesthetic resource, scenic value, or natural area?			
d.	Impacts on recreational opportunities?			
e.	Impacts on public health and safety?			
f.	Impacts on the level of public interest or controversy related to the site or watershed?			
g.	Significant economic impacts to the sponsor, landowners, or public?			

RECOMMENDATION (check one):

_____ To the best of my knowledge, no further environmental analysis is required. The evaluation indicates work should proceed including situations where long-term beneficial effects outweigh short-term adverse effects.

_____ There is, or may be an adverse effect on one or more of the environmental evaluation aspects. Further analysis will be necessary. The landowner will be informed not to proceed with the project until evaluation is completed.

_____ Evaluation indicates significant (*see bottom page 3) adverse environmental effects will result. Other alternatives will be explored or the project will not proceed with federal technical or financial assistance.

Signature Title Date

OTHER CONSIDERATIONS:
Is a 401/404 Permit needed? (yes/no) _____
Who will prepare?_____

Are all state, county, tribal and local requirements met? (yes/no)_____
List other permits needed or items needing attention:_____
_____

Document mitigation planned or required to minimize, avoid, compensate over time or replace negatively impacted resources?
_____
_____

Document communications with State NRCS Cultural Resource Specialist, Indian Nation cultural resource departments or SHPO
_____
_____
_____

Document communications with AG&F, USF&WS, Indian Nation Natural Resource personnel, CofE, ADEQ, ADWR, etc.
_____
_____

Discuss any short-term, long-term, or cumulative effects (beneficial, adverse, controversial, uncertain):
_____
_____

Alternatives to Proposed Action that were considered (include reasons why alternative was not selected):
1. No Action – _____
2. _____
3. _____

Remarks or Other Considerations:
_____
_____

NRCS Special Environmental Concerns Policy	**Policy Location**
Prime & Unique Farmland	310 GM 403
Threatened & Endangered Species	190 GM 410.22(b)
Landscape Resource	190 GM 410.24
Natural Area	190 GM 410.23
Wild & Scenic Rivers	FOTG Section 1
Wetland	190 GM 410.26 FSA Manual & COE Tech Rep. Y-87-1
Riparian Area	190 GM 411
Special Aquatic Site	EPA 404(b)(1)230.3 & 230.10, Federal Register 12/24/80
Floodplain Management	190 GM 410.25
Stream Channel Modification	190 GM 410.27
Cultural Resources	420 GM 410.27

*Significantly definition from NEPA Regulations 40 CFR Part 1508.27:
"**Significance** requires considerations of both context and intensity. **Context** means that significance of an activity must be analyzed in several contexts, such as the action's relation to society, the affected region and locality, affected interests, short- and long-term timeframe differences.....**Intensity** refers to the severity of potential impacts that may be produced by the proposed activity. Intensity refers to the degree to which the proposed activity may affect other entities.....(including all items included in this EE). Degree refers to capability of the proposed activity to induce public controversy, create highly uncertain, unique or unknown risks; set a precedent for future actions with significant effects, especially relating to cumulative impacts; and the extent to which local, state, or Federal laws are affected.

THE UNIVERSITY OF ARIZONA®
COLLEGE OF AGRICULTURE

Laboratories Conducting Soil, Plant, Feed or Water Testing

ISSUED AUGUST 1999 BY:
Jeff Schalau
Agriculture & Natural Resources Agent

ag.arizona.edu/pubs/garden/az1111.pdf

This information has been reviewed by university faculty.

PUBLICATION AZ1111
8/99

Acculab Inc.
1725 West 17th St.
Tempe, AZ 85281
(602) 967-1310
FAX (602) 967-1016
* (environmental: water)

Chandler Analytical Laboratories
283 N. Arizona Ave
Chandler, AZ 85224
(480) 963-2495
FAX (480) 963-4468
(feed)

IAS Laboratories
2515 E. University Dr.
Phoenix, AZ 85034
(602) 273-7248
FAX (602) 275-3836
(soil, plant, water, manure, compost, fertilizer)

Laboratory Consultants, Ltd.
947 South 48th St, Suite 127
Tempe, AZ 85281
(602) 858-1841
FAX (602) 858-0752
(soil, plant, water, manure, feed, fertilizer)

Miller Laboratories
3114 W. Clarendon Ave
Phoenix, AZ 85017
(602) 264-1766
FAX (602) 264-1767
(feed, microorganisms)

McKenzie Laboratories
3725 E. Atlanta Ave, Suite 1
Phoenix, AZ 85040-2960
(602) 470-0288
FAX (602) 470-0756
* (environmental: water, soils)

Stanworth Crop Consultants
413 W. Hobsonway
Blythe, CA 92225
(760) 922-3106
FAX (760) 922-2770
(feed, plants, soil)

Turner Laboratories, Inc.
1819 W. Drake Dr., Suite 102
Tempe, AZ 85283
1-800-882-5804
(602) 345-0795
FAX (602) 491-7305
e-mail: nturner@turnerlabs.com
* (environmental: water, soil)

Turner Laboratories, Inc.
2445 N. Coyote Dr., Suite 104
Tucson, AZ 85745
(520) 882-5880
FAX (520) 882-9788
* (environmental: water, soil)

National Testing Laboratories
6555 Wilson Mills Rd., Suite 102
Cleveland, Ohio 44143
1-800-458-3330
440-449-2525
FAX: (440) 449-8585
Environmental: Full Water Screening
(FedEx overnight sampling)

Local Labs that test drinking water for bacteria:

Bradshaw Mountain Diagnostic Lab
Prescott, AZ
778–7823

Verde Medical Labs
Cottonwood, AZ

* Laboratories conducting environmental tests analyze materials for pollutants or toxins.

COOPERATIVE EXTENSION
YAVAPAI COUNTY
P.O. Box 388 • Prescott, AZ 86302 • (520) 445-6590
2657 Village Drive • Cottonwood, AZ 86326 • (520) 646-9113

Issued in furtherance of Cooperative Extension work, acts of May 8 and June 30, 1914, in cooperation with the U.S. Department of Agriculture, James A. Christenson, Director, Cooperative Extension, College of Agriculture, The University of Arizona.
The University of Arizona College of Agriculture is an equal opportunity employer authorized to provide research, educational information and other services only to individuals and institutions that function without regard to sex, race, religion, color, national origin, age, Vietnam Era Veteran's status, or disability.
Any products, services, or organizations that are mentioned, shown, or indirectly implied in this publication do not imply endorsement by The University of Arizona.

References

1. **NRCS Agricultural Waste Management Field Handbook**

2. **Comprehensive Nutrient Management Planning Technical Guidance**

3. **NRCS Field Office Technical Guide**

4. **NRCS National Handbook of Conservation Practices**

5. **NRCS National Planning Procedures Handbook**

6. **NRCS National Agronomy Manual**

7. **Manure Management Planner - @http://www.sevicecenter.usda.gov/release/#M**

8. **Spatial Nutrient Management Planner (SNMP)**

9. **Animal Feeding Operation Wizard – Planned Release in April 2002**

10. **FEMA maps**

11. **NOAA Atlas map – 25-year, 24-hour precipitation**