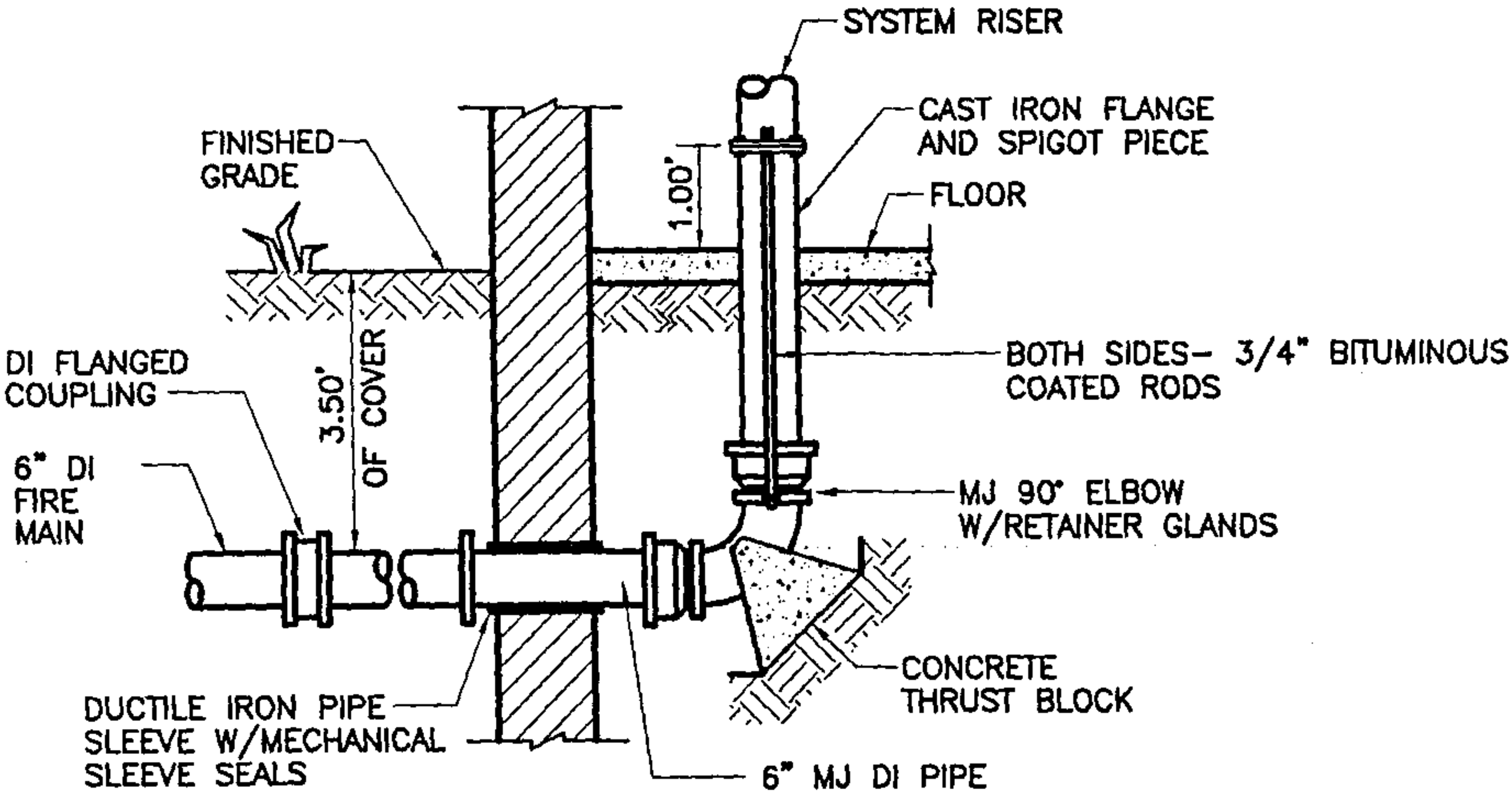

NOTE: WHERE MAIN PASSES BELOW FOOTING, CLEARANCE SHALL BE PROVIDED TO PREVENT PIPE BREAKAGE DUE TO BUILDING SETTLEMENT.

DETAIL – FIRE PROTECTION SYSTEM RISER

NO SCALE